US005562728A

United States Patent [19]

Lazarus et al.

[11] Patent Number: 5,562,728

[45] Date of Patent: Oct. 8, 1996

[54] **ENDOVASCULAR GRAFTING APPARATUS, SYSTEM AND METHOD AND DEVICES FOR USE THEREWITH**

[76] Inventors: **Harrison M. Lazarus**, 324 Tenth Ave., #260, Salt Lake City, Utah 84103; **Ronald G. Williams**, 1313 Sherman Ave., Menlo Park, Calif. 94025; **Wesley D. Sterman**, 2121 Sacramento St., #604, San Francisco, Calif. 94109; **Alec A. Piplani**, 141 Delmedio Ave., #219, Mountain View, Calif. 94040

[21] Appl. No.: **420,623**

[22] Filed: **Apr. 12, 1995**

Related U.S. Application Data

[60] Continuation of Ser. No. 109,162, Aug. 19, 1993, abandoned, which is a division of Ser. No. 553,530, Jul. 13, 1990, Pat. No. 5,275,622, which is a continuation-in-part of Ser. No. 166,093, Mar. 9, 1988, Pat. No. 5,104,399, which is a continuation-in-part of Ser. No. 940,907, Dec. 10, 1986, Pat. No. 4,787,899, which is a continuation of Ser. No. 559,935, Dec. 9, 1983, abandoned.

[51] **Int. Cl.**[6] **A61F 2/06**

[52] **U.S. Cl.** **623/1**; 606/153; 606/194

[58] **Field of Search** 623/1, 11, 12; 606/151, 153, 191, 192, 194, 198

[56] **References Cited**

U.S. PATENT DOCUMENTS

3,657,744	4/1972	Ersek	3/1.3
4,140,126	2/1979	Choudhury	623/1 X
4,214,587	7/1980	Sakura, Jr.	12/334 R
4,577,631	3/1986	Kreamer	128/334 R
4,580,568	4/1986	Gianturco .	
5,078,726	1/1992	Kreamer	606/194
5,219,355	6/1993	Parodi et al.	606/191
5,292,331	3/1994	Boneau	606/198

FOREIGN PATENT DOCUMENTS

0346564A1	12/1989	European Pat. Off. .
0461791AI	12/1991	European Pat. Off. .
0479557A1	4/1992	European Pat. Off. .
0539237A1	4/1993	European Pat. Off. .
8812719	12/1989	Germany .
1217402A	3/1986	Russian Federation .
1318235A1	6/1987	U.S.S.R. .
1389778A2	4/1988	U.S.S.R. .
1457921A1	2/1989	U.S.S.R. .
1482714A2	5/1989	U.S.S.R. .
WO90/15582	12/1990	WIPO .

OTHER PUBLICATIONS

Balko, MD et al., Journal of Surgical Research (1986); pp. 40:305–309, "Transfemoral Placement of Intraluminal Polyurethane Prosthesis For Abdominal Aortic Aneurysm" .

Lawrence, Jr. MD et al., Radiology (1987); pp. 163:357–360, "Percutaneous Endovascular Graft: Experimental Evaluation".

Yoshioka et al., AJR (Oct. 1988); pp. 151:673–676, "Self-Expanding Endovascular Graft: An Experimental Study in Dogs".

Mirich, MD et al., Radiology (1989) pp. 170:1033–1037, "Percutaneously Placed Endovascular Grafts For Aortic Aneurysms: Feasibility Study".

Primary Examiner—Mary Beth Jones

Attorney, Agent, or Firm—Fulwider Patton Lee & Utecht

[57] **ABSTRACT**

Endovascular grafting system having a capsule catheter comprising a flexible elongate tubular member having proximal and distal extremities and a capsule mounted on the distal extremity of the tubular member. The capsule is generally cylindrical in shape and is formed of a helical wrap of a metal ribbon. The wraps are bonded into a unitary capsule permitting bending of said unitary capsule. A graft is disposed within the capsule. The graft is comprised of a tubular member having proximal and distal ends. Hooks are secured to the proximal and distal ends of the tubular member and face in a direction outwardly towards the inner wall of the capsule. A push rod is disposed within the capsule catheter and engages the graft whereby upon relative movement between the push rod and the capsule catheter, the graft can be forced out of the capsule.

35 Claims, 5 Drawing Sheets

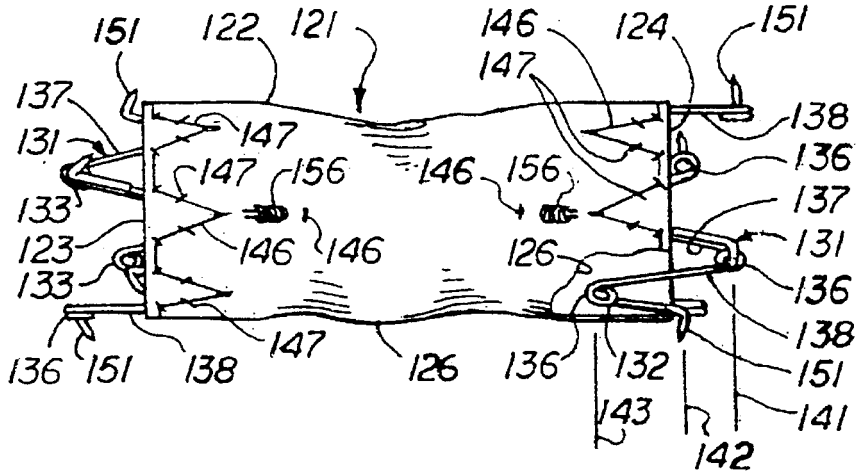

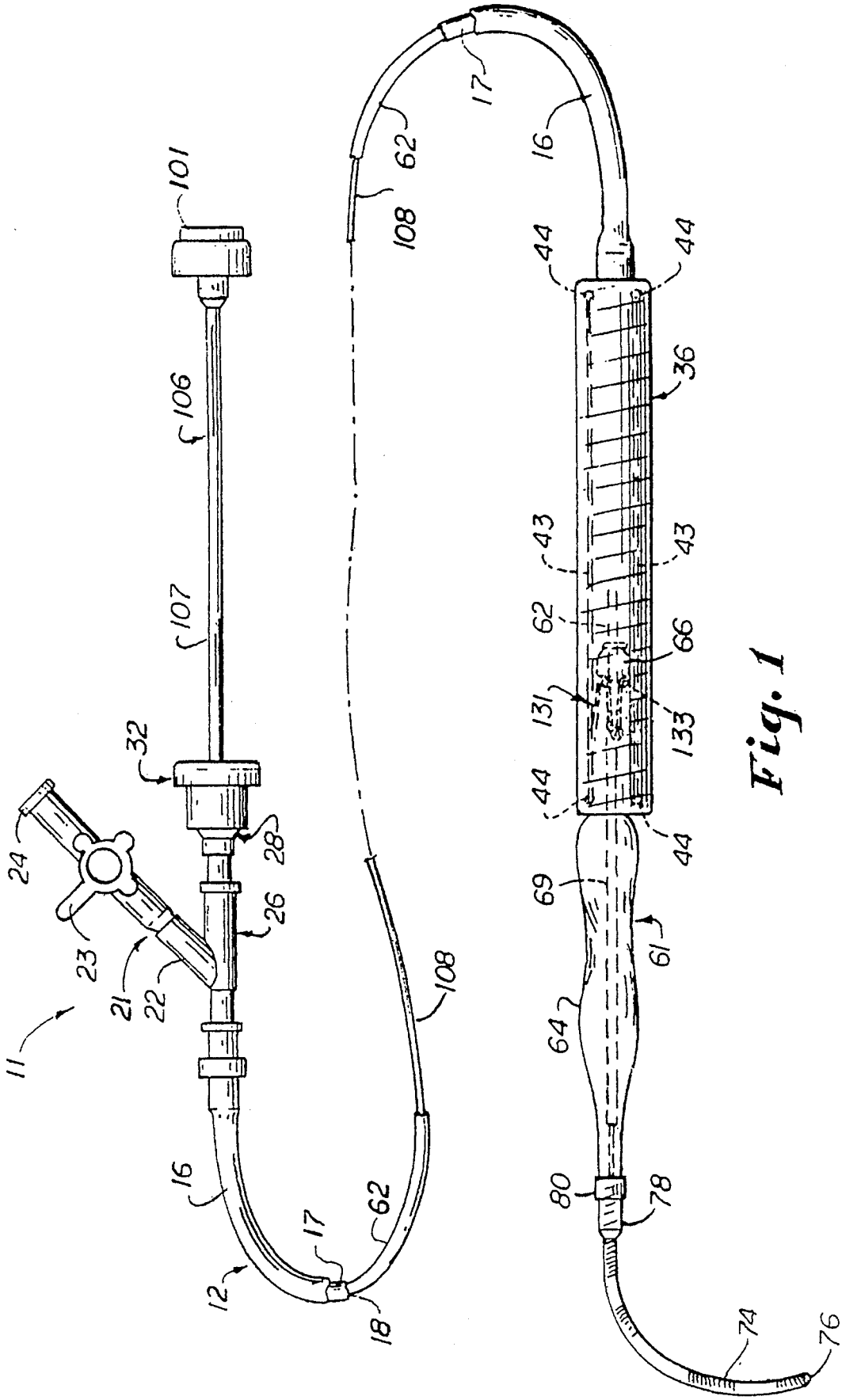
101
106
107
32
28
26
24
23
21
22
11
16
12
17
18
62
108
108
62
17
16
44
44
36
43
43
62
66
131
133
44
44
69
61
64
80
78
74
76

Fig. 1

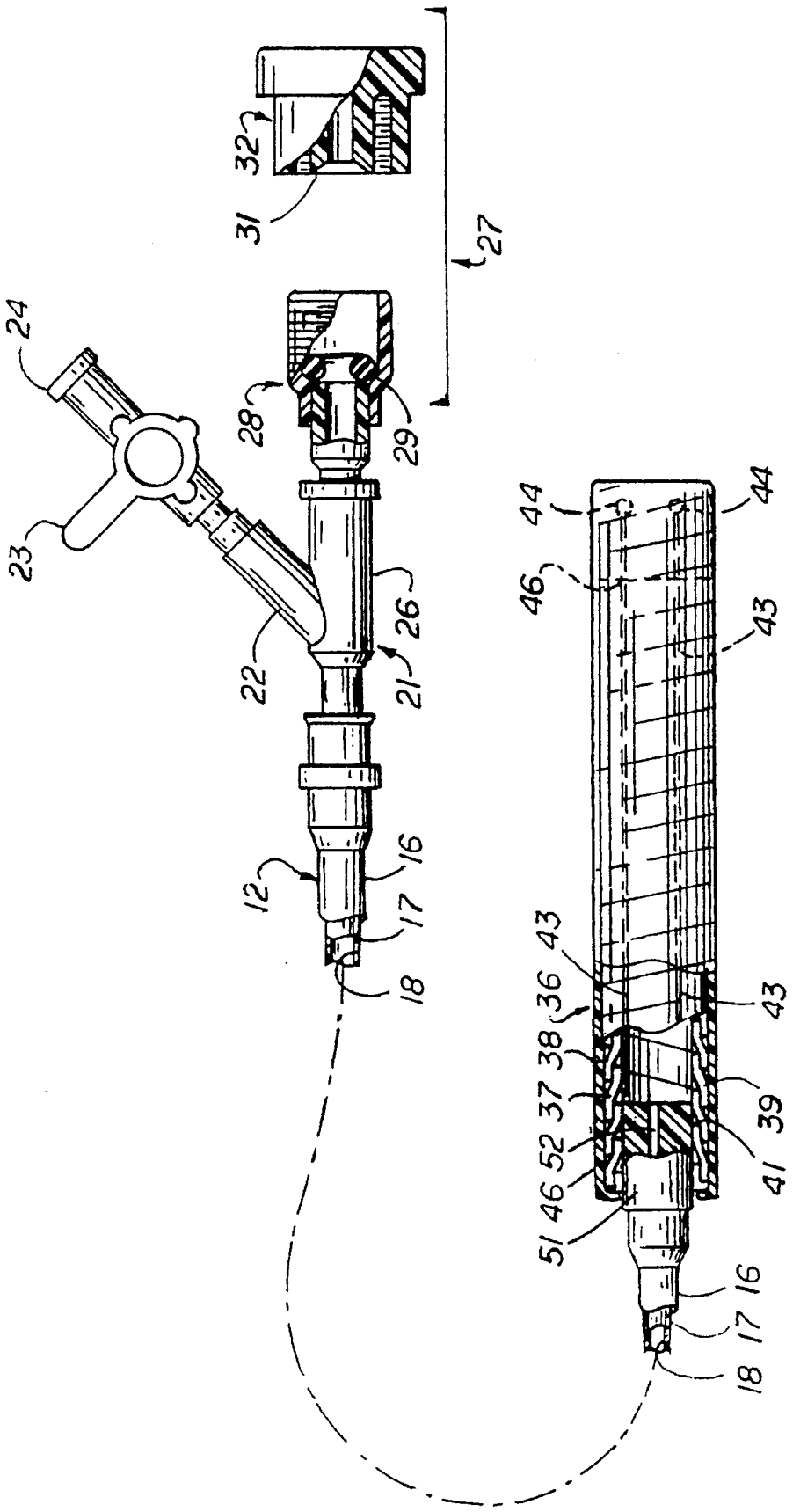
24
23
22
12
18
17
16
21
26
28
29
27
31
32
44
44
46
43
43
36
38
37
52
46
51
39
41
16
17
18

Fig. 2

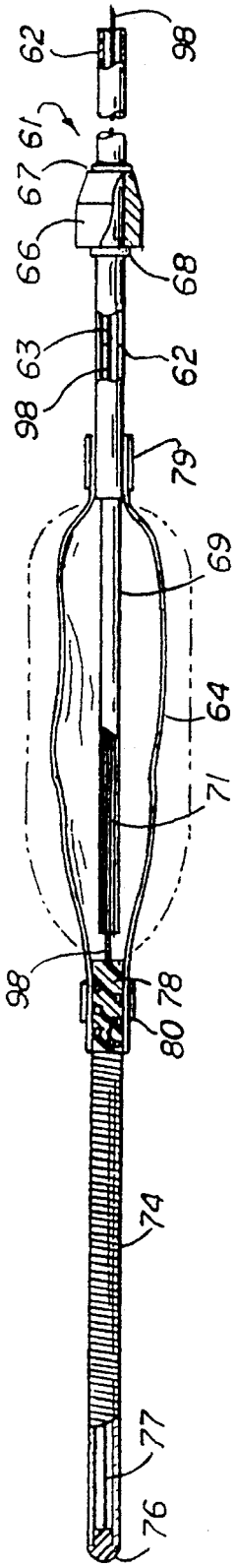

Fig. 3

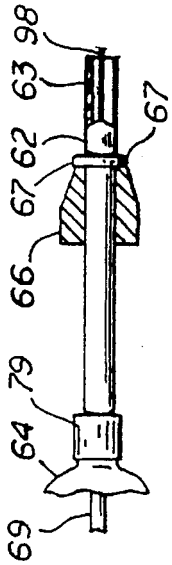

Fig. 4

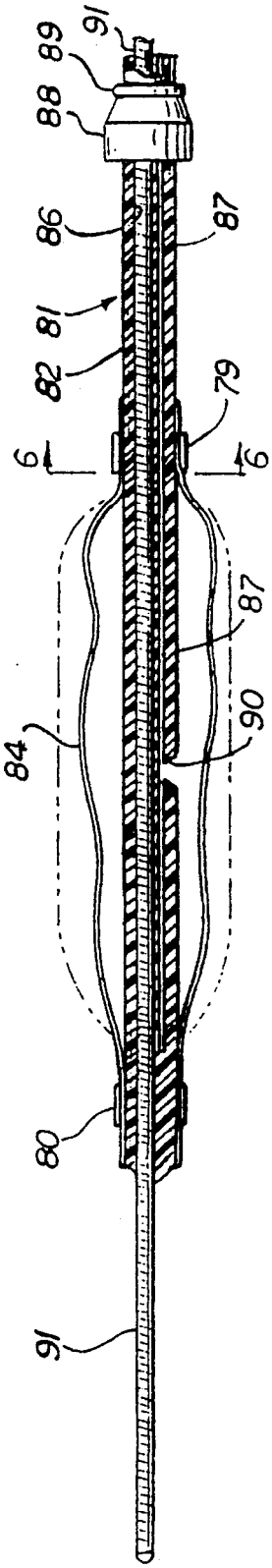

Fig. 5

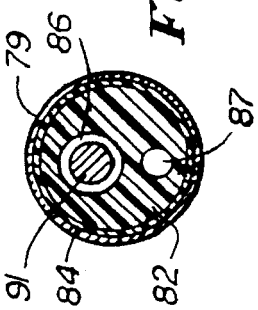

Fig. 6

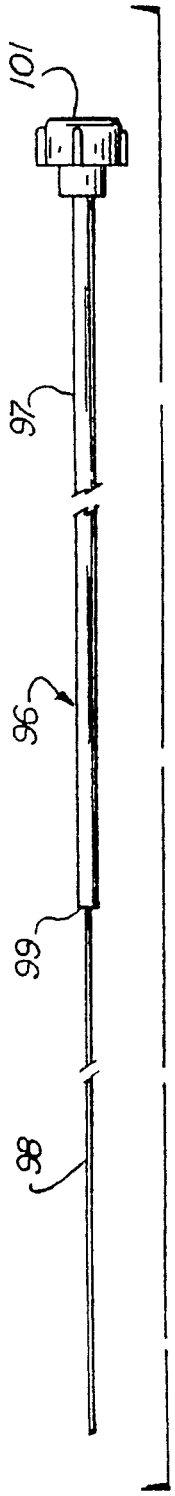

Fig. 7

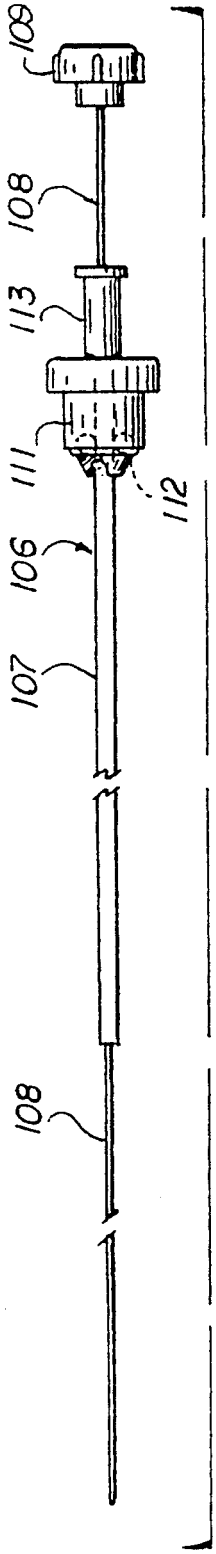

Fig. 8

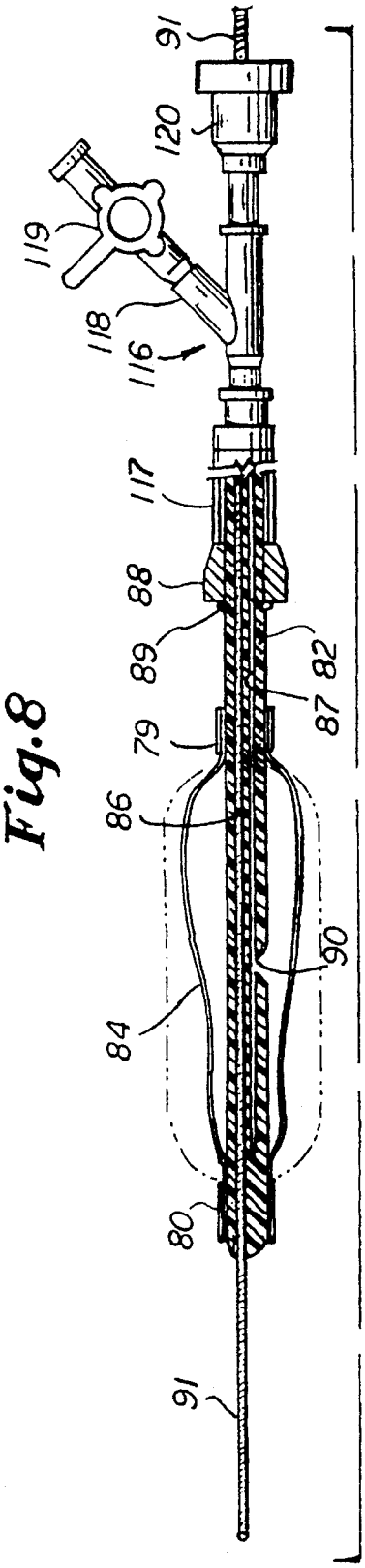

Fig. 9

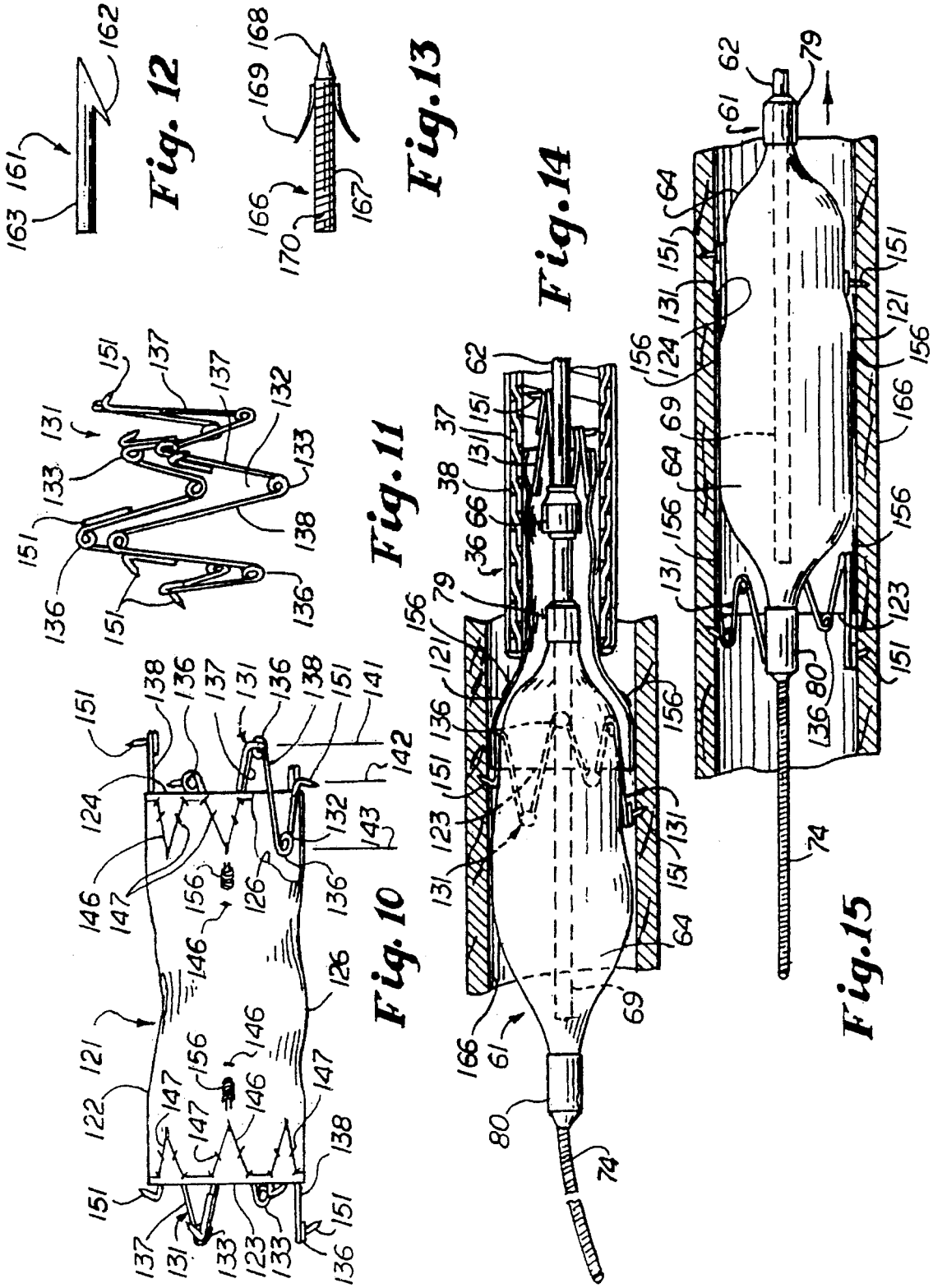
Fig. 12
Fig. 13
Fig. 14
Fig. 11
Fig. 10
Fig. 15

ENDOVASCULAR GRAFTING APPARATUS, SYSTEM AND METHOD AND DEVICES FOR USE THEREWITH

This application is a continuation of application Ser. No. 08/109,162, filed Aug. 19, 1993, now abandoned, which is a division of application Ser. No. 07/553,530, filed Jul. 13, 1990, now U.S. Pat. No. 5,275,622, which is a continuation-in-part of application Ser. No. 07/166,093 filed Mar. 9, 1988, now U.S. Pat. No. 5,104,399 which is a continuation-in-part of application Ser. No. 06/940,907 filed on Dec. 10, 1986, now U.S. Pat. No. 4,787,899 which is a continuation of application Ser. No. 06/559,935 filed on Dec. 9, 1983 now abandoned. These applications are incorporated herein by reference.

BACKGROUND OF THE INVENTION

This application relates to endovsacular grafting apparatus, system and method and devices for use therewith.

The state of the art is described in the background of the invention in U.S. Pat. No. 4,787,899.

SUMMARY OF THE INVENTION

In general, it is an object of the present invention to provide an endovascular grafting apparatus, system and method and devices for use therewith which overcome the disadvantages of the prior art apparatus, systems and devices.

Another object of the invention is to provide an apparatus and system of the above character which utilizes a pusher rod assembly which is constrained so that relatively great forces can be applied by the pusher rod assembly.

Another object of the invention is to provide an apparatus and system of the above character in which the capsule is flexible so that it can negotiate bends in the vessels of a patient.

Another object of the invention is to provide a grafting apparatus and system which utilizes a flexible capsule which can contain a graft with hook-like elements without any danger of the hook-like elements penetrating the capsule.

Another object of the invention is to provide an apparatus and system of the above character in which the graft automatically springs into an open or expanded position when it is released from the capsule.

Another object of the invention is to provide an apparatus, system and method of the above character in which a pushing force is applied to the distal extremity of the balloon for advancing a graft out of the capsule.

Another object of the invention is to provide an apparatus and system of the above character in which a fixed wire or an over-the-wire guide wire system can be used.

Another object of the invention is to provide an apparatus and system of the above character in which the graft can be compressed to a very small size in a flexible capsule.

Additional objects and features of the invention will appear in the following description in conjunction with the accompanying drawings.

BRIEF DESCRIPTION OF THE DRAWINGS

FIG. **1** is an isometric view of an endovascular grafting apparatus and system incorporating the present invention.

FIG. **2** is a side elevational view partially in cross section of a capsule catheter incorporating the present invention.

FIG. **3** is a side elevational view partially in cross section showing a balloon catheter assembly incorporating the present invention.

FIG. **4** is a partial side elevational view in cross section of a portion of an alternative balloon catheter assembly incorporating the present invention showing the use of a movable pusher button capable of sliding over a limited range.

FIG. **5** is a side elevational view partially in cross section of another alternative embodiment of a balloon catheter assembly incorporating the present invention showing the use of a movable guide wire.

FIG. **6** is a cross sectional view taken along the line **6—6** of FIG. **5**.

FIG. **7** is a side elevational view partially in cross section of a pusher rod assembly incorporating the present invention.

FIG. **8** is a side elevational view partially in cross section of another embodiment of a pusher rod assembly incorporating the present invention.

FIG. **9** is a cross sectional view partially in cross section showing in combination a balloon catheter and a pusher rod assembly and a movable guide wire.

FIG. **10** is a side elevational view of a graft incorporating the present invention.

FIG. **11** is an enlarged isometric view showing one of the spring attachment means utilized on the graft.

FIG. **12** is a partial enlarged view of an alternative hook-like element utilized in the spring attachment means of FIG. **11**.

FIG. **13** is an enlarged view showing another embodiment of a hook-like element used in the spring attachment means of FIG. **11**.

FIG. **14** is a side elevational view partially in cross section showing the manner in which the graft is held in the capsule after ejection of the proximal extremity of the graft from the capsule.

FIG. **15** is a view similar to FIG. **14** but showing the proximal and distal extremities of the graft outside of the capsule with the balloon retracted so that it is within the graft and inflated to force the distal attachment means into the vessel wall.

DESCRIPTION OF THE PREFERRED EMBODIMENTS

In general, the endovascular grafting system is comprised of a capsule catheter having a flexible elongate tubular member with proximal and distal extremities and a capsule mounted on the distal extremity of the tubular member. The capsule is generally cylindrical in shape and is formed of a helical wrap of a metal ribbon. Means is provided for bonding said wraps into a unitary capsule while permitting bending of said unitary capsule. A graft is disposed within the capsule. The graft is comprised of a tubular member having proximal and distal ends. Hook-like attachment means is secured to the proximal and distal ends of the tubular member and face in a direction outwardly towards the inner wall of the capsule. Push rod means is disposed within the capsule catheter and engages the graft whereby upon relative movement between the push rod means and the capsule catheter, the graft can be forced out of the capsule.

More in particular, the endovascular grafting apparatus and system **11** and the devices for use therein are shown in FIGS. **1–10**. This apparatus and system **11** includes a capsule

catheter **12** (see FIG. **2**) which consists of a flexible elongate tubular member **16** formed of a suitable plastic material such as Nylon of a suitable length as, for example, 40 to 100 centimeters and preferably approximately 43 centimeters for the abdominal aortic artery and approximately 70 centimeters for the thoracic aortic artery. The tubular member **16** can have a suitable size such as an outside diameter of 0.187 inches and an inside diameter of 0.125 inches. The tubular member **16** can be produced in a certain color such as blue. In order to make it radiopaque under x-rays, the flexible tubular member **16** is loaded with a suitable radiopaque material such as bismuth subcarbonate or barium sulfate. By way of example, the flexible elongate member **16** can be compounded with approximately 20% of the radiopaque material by weight. An inner liner **17** is provided which is mounted within the tubular member **16**. The liner **17** is sized so that it will fit within the tubular member **16**. The liner is preferably formed of a lubricious material such as Tefzel (ethylene tetrafluoroethylene) or Teflon FEP (flourinated ethylene polypropylene). It can have an inside diameter of 0.085 inches and an outside diameter of 0.125 inches and a length as, for example, 41 centimeters which is slightly less than that of the tubular member **16**. If desired, the inside diameter of the liner **17** can be in the range of 0.075 to 0.120 inches. The liner **17** is provided with a lumen **18** which extends the length thereof. The liner **17** reduces the inside diameter of the lumen **18** for a purpose hereinafter described. The liner **17** is made of a radiation stable material so that the catheter can be radiation sterilized. Tefzel, or Teflon FEP, which is a polymer is such a radiation sterilizable material. The inner liner **17** also serves to provide additional columnar strength to the catheter **12**.

A wye adapter **21** is secured to the proximal extremity of the flexible tubular member **16**. The side arm **22** of the adapter **21** has a stop cock **23** mounted therein which is movable between open and closed positions. The stop cock **23** is provided with a Luer fitting **24** which is adapted to be secured to a syringe which can be utilized for injecting a dye, or medications such as a vasodilator. The central arm **26** of the adapter **21** is connected to a Touhy Borst adapter **27** and includes a female part **28** that carries an O-ring **29** which is adapted to be engaged by a protrusion **31** forming a part of the male part **32**.

The capsule catheter **12** has a capsule **36** incorporating the present invention mounted on the distal extremity of the flexible elongate tubular member **16**. The capsule **36** when used in humans has a diameter ranging from 4 to 8 millimeters. The flexible elongate tubular member **16** which also serves as a shaft for advancing the capsule **36** as hereinafter described and should have a diameter which is less than that of the capsule and therefore has an outside diameter ranging from 3 to 7 millimeters.

The capsule **36** is a composite structure and is formed of an inner layer **37** and an outer layer **38**. The inner layer **37** is formed of a stainless steel ribbon **39** with the ribbon having a width of 0.150 inches and a thickness ranging from 0.002 to 0.004 inches and preferably approximately 0.003 inches. The ribbon is spiral wound on a mandrel (not shown) so that each wrap of the ribbon overlaps the preceding wrap by approximately 30 to 50% of the width of the ribbon. Viewing the capsule **36** from the left hand end, the ribbon is wrapped in a clockwise or counterclockwise direction so that the edges **41** face distally or in the direction which is toward the right as shown in FIG. **2** for a purpose hereinafter described. By winding the ribbon **37** at high tension, it is possible to deform it over the adjacent wrap which contributes to the flexibility of the capsule and also at the same time makes it possible to provide a capsule having a low profile. The stainless steel for the ribbon **39** can be of any suitable type, however, it has been found that it is desirable to select a stainless steel which can be heat treated. This enables one to wind the capsule with the ribbon in a ductile state and heat treat the capsule after winding to obtain a spring-like temper. One such stainless steel is 17-7 PH supplied by Brown Metals Company of Santa Fe Springs, Calif.

In order to prevent elongation of the capsule **36** and also to prevent one wrap separating from another of the inner layer **37**, a plurality of elongate flexible strands **43** are provided which extend from one end to the other of the capsule. It has been found that the use of four strands has been sufficient with the strands being spaced apart circumferentially by 90°. The strands **43** can be formed of a suitable material such as a Kevlar aramid fiber, 195 denier. These four strands **43** are bonded to the proximal and distal extremities of the capsule by a suitable adhesive such as a cyanoacrylate ester at points **44**. The outer layer **38** which overlies the strands **43** and the wrapped ribbon inner layer **37** is in the form of a jacket formed of a suitable material such as heat shrinkable polyethylene. This jacket can have a wall thickness ranging from 0.001 to 0.006 inches and preferably a thickness of approximately 0.004 inches. The polyethylene jacket which forms the outer layer **38** serves to contain the Kevlar strands **43** in close proximity to the inner layers **37** and also serves to prevent elongation of the capsule **36** while permitting the capsule to bend during use as hereinafter described. The outer layer or jacket **38** serves also to provide a smooth surface for the exterior of the capsule **36** by enclosing the edges **41** of the wraps of ribbon **39**. In addition, the proximal and distal extremities of the capsule **36** are bonded together by a solder in the regions **46** as indicated in FIG. **2**. The solder can be of a suitable type, such as a tin silver solder comprised of 95% tin and 5% silver. When constructed in this manner, the capsule **36** can have an inside diameter of 0.175 inches to 0.300 inches with a nominal wall thickness of 0.0012 inches.

The capsule **36** is secured to the distal extremity of the flexible elongate tubular member **16** by a capsule adapter **51** of a suitable material such as a polycarbonate. The capsule adapter **51** is secured in the proximal extremity of the capsule **36** by suitable means, as a press fit or alternatively, in addition, by the use of a suitable adhesive such as a cyanoacrylate ester. The other extremity of the capsule adapter **51** is also mounted in a suitable manner such as by a cyanoacrylate ester adhesive to the distal extremity of the flexible elongate tubular member **16**. The capsule adapter **51** is provided with a hole **52** of a suitable diameter such as 1/16th of an inch.

The capsule **36** made in accordance with the present invention has a number of desirable features. It is particularly desirable because it is flexible and can be bent through an angle of 70° to 120° in a length of 8–20 centimeters. In order to prevent hangups on the inside edges **41** of the ribbon, the inside edges are rounded and polished, preventing damage to capsule contents during ejection as hereinafter described. The Kevlar strands **43**, which are also contained by the outer jacket or layer **38**, serve to maintain the wrap, prevent stretching or elongation and prevent discontinuities from being formed in the capsule during use of the same. In addition, the Kevlar strands prevent the capsule from being flexed beyond a predetermined angle, as, for example, 120°.

Thus, it can be seen that a capsule **36** has been provided which is very flexible, yet is still very hard and has great strength which inhibits crushing or collapsing while being

bent or flexed. In other words, it is kink resistant. It is also puncture proof due to the use of the metal ribbon **39**. The capsule **36** is semi-radiopaque and is radiation sterilizable.

The endovascular grafting apparatus also includes a balloon catheter assembly **61** which consists of a shaft in the form of a flexible elongate element **62** formed of a suitable material such as irradiated polyethylene tubing extruded to a larger diameter of 0.160 inches outside diameter and 0.090 inches inside diameter and then reduced in size by heating and elongating the same to provide an inside diameter of 0.020 inches and an outside diameter of 0.050 inches. However, the inside diameter can range from 0.015 to 0.025 inches and the outside diameter can range from 0.035 to 0.065 inches for a single lumen balloon catheter assembly. The single balloon inflation lumen **63** extends the length of the catheter. The catheter can have a suitable length as, for example, 50 to 130 centimeters. The lumen **63** can also serve as an injectate lumen and a pusher wire lumen as hereinafter described.

A separate balloon **64** formed of suitable material such as polyethylene is secured to the distal extremity of the flexible elongate member **62** in a manner hereinafter described. A pusher button **66** is provided which is formed of a suitable material such as 300 series stainless steel. The pusher button **66** can have a diameter ranging from 0.120 inches to 0.200 inches and preferably an outside diameter of approximately 0.140 inches. Stainless steel is utilized to achieve radiopacity.

The pusher button **66** is mounted on a fixed position on the catheter shaft **62** and is spaced a predetermined distance from the proximal extremity of the balloon **64** as, for example, a distance of 2 to 3 centimeters. The pusher button **66** is retained in this position longitudinally of the shaft **62** by annular bulbs **67** and **68** which are formed by localized heating in those areas of the shaft **62** which causes it to expand radially in an attempt to achieve its original size to trap the pusher button **66** in that position on the shaft **62**. Thus, it can be seen that the pusher button **66** can be mechanically trapped in place without the use of an adhesive and without changing the size of the lumen **63** which extends therethrough. An alternative embodiment in which the pusher button **66** is movable between the proximal extremity of the balloon **64** and a single bulb **67** is shown in FIG. **4**.

A small stainless steel tube **69** is disposed within the balloon **64** and has its proximal extremity seated within the distal extremity of the shaft or flexible elongate member **62**. The tube **69** has a suitable inside diameter such as 0.022 inches, an outside diameter of 0.032 inches and a suitable length as, for example, 7.5 centimeters. As can be seen from FIG. **3**, the tube **69** extends through the balloon **64** and terminates in the distal extremity of the balloon. The proximal extremity of the tube **69** is flared slightly so that it is firmly retained within the shaft **62** when the proximal extremity of the balloon is fused to the shaft **62** by the use of heat. The tube **69** serves to provide stiffness to the balloon **64** of the balloon catheter assembly **61** and is provided with a lumen **71** extending therethrough through which a fluid such as a gas or liquid can be introduced from the lumen **63** into the lumen **71** to inflate the balloon and to thereafter deflate the balloon **64** by withdrawing the gas or liquid. The balloon **64** can vary in diameter from 12 to 35 millimeters in diameter and can have a wall thickness ranging from 0.001 and 0.005 inches. The polyethylene utilized for the balloon is irradiated to achieve an appropriate balloon size. One balloon made in accordance with the present invention had an outside diameter of 16 millimeters and had a wall thickness of approximately 0.003 inches. In addition, the balloon when deflated is twisted into a helix and heated so as to provide it with a memory which facilitates its introduction into a vessel of a patient as hereinafter described.

A very flexible guide wire **74** is secured to the distal extremity of the balloon **64**. The guide wire can have a suitable diameter such as 0.052 inches in outside diameter and can have a suitable length, as for example, 7 centimeters. The guide wire **74** can be a spring formed from wire having a suitable diameter such as 0.009 inches so that it will be radiopaque and thus readily observable under x-rays when being used. The guide wire is provided with a rounded tip **76** which can be formed from a suitable material such as a tin silver solder of 95% tin and 5% silver. The solder tip **76** has bonded therein the distal extremity of a safety ribbon **77** which extends towards the proximal extremity of the spring guide wire **74** and is secured to the proximal extremity thereof by suitable means such as the same tin silver solder hereinbefore described. The guide wire **74** can range in diameter from 0.036 inches to 0.060 inches. The ribbon **77** can be formed of a suitable material such as stainless steel and have a thickness of 0.003 inches and a width of 0.010 inches.

As can be seen from FIG. **3**, the proximal extremity of the spring guide wire **74** has been stretched longitudinally beyond the yield point so that there is a space or interstice between each turn of the wire forming the proximal extremity of the spring. A plug **78** of a non-irradiated polyethylene is placed within the proximal extremity of the spring guide wire **74** but remote from the distal extremity of the tube **69**. The plug **78** and the distal extremity of the balloon **64** are then heated to cause the non-irradiated polyethylene to melt and flow into the interstices of the stretched spring **74** to bond the spring **74** to the distal extremity of the balloon **64** and to seal-the distal extremity of the balloon so that gas cannot escape therefrom.

The guide wire **74** is easily observed using x-rays due to its width and stainless steel composition. Since the pusher button **66** is also formed of stainless steel, it also is an easy marker to follow. The pusher button **66** and guide wire **74** help indicate the position of the balloon **64** because the balloon **64** is positioned between the pusher button **66** and the guide wire **74**. The balloon **64** itself can be observed under x-rays because the blood in the patient's vessel is more opaque than the gas used for inflating the balloon. However, increased visibility of the balloon **64** can be obtained by inflating the balloon **64** with a diluted radiopaque contrast solution. In addition, if desired as shown in FIG. **3**, two radiopaque bands **79** and **80** of a suitable material such as platinum or a platinum tungsten alloy can be placed on the proximal and distal extremities or necked-down portions of the balloon **64** to aid in ascertaining the position of the balloon **64**. It should be appreciated that although a separate balloon **64** has been provided, if desired, an integral balloon can be provided which is formed of the same tubing from which the flexible elongate tubular member **62** is made. This can be readily accomplished, as is well known to those skilled in the art, by using an additional radiation dose for the balloon region of the tubing.

In FIGS. **5** and **6** there is shown an alternative balloon catheter assembly **81** which utilizes a multi-lumen flexible shaft **82** having a balloon **84** secured to the distal extremity of the same. The flexible shaft **82** is provided with a guide wire lumen **86** of a suitable size, as for example, 0.040 inches which extends the entire length of the shaft and through the balloon **84**. It is also provided with a balloon inflation lumen **87** of a smaller size such as 0.010 to 0.015 inches which opens through a notched recess **90** into the

interior of the balloon **84**. The lumen **87** can be connected to a suitable syringe or other device for inflating and deflating the balloon **84**. A pusher button **88** is mounted on the shaft **82** which is held in place by a bulb **89** formed on the shaft **82**. A conventional guide wire **91** can then be inserted into the lumen **86** of the catheter assembly **81** and utilized in a conventional manner to advance the balloon catheter into tortuous vessels. Thus it can be seen that applicants' balloon catheter assembly **81** can be utilized in an over-the-wire system which is commonly used in angioplasty. The proximal and distal extremities of the balloon **84** can be fused by heat to the shaft **82** so that the balloon **84** can be inflated and deflated. With the guide wire **91** removed the lumen **86** can be used as an injectate lumen.

The endovascular grafting apparatus also includes a pusher rod assembly **96** which is shown in FIG. **7**. It consists of a rigid thin wall tube **97** formed of a suitable material such as stainless steel. It has a suitable length as, for example, 21 centimeters and has an outside diameter of 0.065 inches and an inside diameter of 0.053 inches. An elongate solid flexible wire **98** of a suitable diameter as, for example, 0.018 inches is provided which extends centrally into the bore **99** of the tube for the entire length of the rigid tube **97**. The wire **98** is secured by suitable means such as an adhesive into a male Luer cap **101** mounted on the proximal end of the tube **97**.

The outside of the tube **97** is small enough so that it can slide inside the lumen sleeve **18** of the liner **17** of the catheter **12**. The bore **99** of the rigid tube **97** is large enough so that it can receive the balloon catheter shaft **62** with the wire **98** extending into the lumen **63** of the shaft **62**. The wire **98** is long enough so that it can extend through the balloon shaft **62** and through the balloon **64** and the tube **69** to engage the plug **78** provided at the distal extremity of the balloon **64**. Typically, the pusher rod assembly **96** has a total length of approximately 75 centimeters.

An alternative pusher rod assembly **106** is shown in FIG. **8** and consists of a rigid tube **107** similar to the tube **97** with a 0.018 wire **108** extending into the same and being connected to a male Luer cap **109**. A Touhy Borst O-ring adapter **111** is secured to the proximal extremity of the tube **107** and is provided with an O-ring **112**. A female Luer fitting **113** is mounted on the Touhy Borst adapter **111**. In use of pusher rod assembly **106**, the shaft **62** of the balloon catheter assembly **61** is threaded into the tube **106** over the wire **108** and through the o-ring **112**. The proximal extremity of the shaft **62** is flared slightly over the o-ring after which the Touhy Borst adapter **111** can be tightened to seal the o-ring **112** around the balloon catheter shaft **62**. After certain operations are accomplished as hereinafter described, the male Luer cap **109** and the wire **108** attached thereto can be removed and a syringe (not shown) can be placed on a female Luer adapter **113** to inflate the balloon.

An alternative embodiment of a pusher rod assembly **116** cooperating with the balloon catheter assembly **81** shown in FIG. **5** is shown in FIG. **9**. The pusher rod assembly **116** is comprised of a flexible relatively rigid tubular sleeve **117** of stainless steel which has a bore of a diameter to accommodate the shaft **82** of the catheter assembly **81** through which the guide wire **91** extends. A wye adapter **118** is secured to the proximal extremity of the sleeve **117**. A stop **119** is mounted in the side arm of the adapter **118** and a Touhy Borst adapter **120** is mounted in the central arm of the adapter **118**. The guide wire **91** extends through the guide wire lumen **86** and through the wye adapter **118** and the Touhy Borst adapter **120** so that it can be readily engaged by the hand for advancing and retracting the guide wire **91**. The balloon **84** can be inflated and deflated through the stop cock **119**. By pushing on the adapter **118** a force is applied to the pusher button **88** by the coaxial sleeve **117** for a purpose hereinafter described.

The endovascular grafting apparatus **11** also includes an expandable intraluminal vascular graft **121** shown in FIGS. **10** and **11** for implanting in a body vessel. The graft **121** consists of a deformable tubular member **122** which is provided with first and second ends **123** and **124** and a cylindrical or continuous wall **126** extending between the first and second ends **123** and **124**. The continuous wall **126** can be woven of any surgical implantable material such as a Dacron-type 56 fiber. One material found to be satisfactory is DeBakey soft woven Dacron vascular prosthesis (uncrimped) sold by USCI. In order to prevent unraveling of the woven material at the ends, the ends can be melted with heat to provide a small melted bead of Dacron on each end. The tubular member **122** can have a suitable length as, for example, 8 to 15 centimeters with 10 centimeters being typical. The tubular member **122** can have a maximum expandable diameter ranging from 14 to 30 millimeters and a minimum diameter in a collapsed condition of 0.175 to 0.300 inches. Expandable spring means **131** is provided on each of the first and second ends **123** and **124** of the tubular member **122** and is secured to the tubular member. The spring means serves to yieldably urge the tubular member **122** from a first compressed or collapsed position to a second expanded position. The spring means **131** is formed of a plurality of vees **132** with the apices **133** of the vees **132** being formed with helical coil springs **136** to yieldably urge the legs **137** and **138** of each of the vees **132** outwardly at a direction at right angles to the plane in which each of the vees lie. The spring means **131** is shown more in detail in FIG. **11** and as shown therein, the spring means is comprised of a single piece of wire which is formed to provide the vees **132** and also to define the helical coil springs **136** between the legs **137** and **138**. In the construction shown in FIG. **10**, it can be seen that the spring means **131** have apices lying in three longitudinally spaced-apart parallel planes **141**, **142** and **143** which are spaced with respect to the longitudinal axis of the tubular member **122**. The two ends of the single piece of wire can be welded together in one of the legs **137** and **138** to provide a continuous spring means.

The spring means **131** is secured to the first and second ends **123** and **124** of the tubular member by suitable means such as a Dacron polyester suture material **146** which is utilized for sewing the spring means onto the tubular member. This can be accomplished by a sewing operation with the suture material **146** extending into and out of the wall **126** of the tubular member and in which knots **147** are formed on each of the legs or struts **137** and **138** in such a manner so that the apices lying in the plane **141** extend outwardly and are spaced from the end on which they are mounted and in which the apices lying in the plane **142** extend just beyond the outer edge of the tubular member and in which the apices in the third plane are positioned inwardly from the outer edge.

Hook-like elements **151** are provided on the apices lying in planes **141** and **142** and are secured to the vees **132** in the vicinity of the apices by suitable means such as welding. The hook-like elements **151** can have a suitable diameter such as 0.010 to 0.14 inches and a length from 0.5 to 3 millimeters. The hook-like elements are sharpened to provide conical tips. The hook-like elements **151** should have a length which is sufficient for the hook to penetrate into the vessel wall, but not through the vessel wall.

The spring means **131** with the hook-like elements **151** secured thereto are formed of a corrosion resistant material

which has good spring and fatigue characteristics. One such material found to be particularly satisfactory is Elgiloy which is a chromium-cobalt-nickel alloy manufactured and sold by Elgiloy of Elgin, Ill. The wire can have a diameter ranging from 0.010 to 0.015 inches in diameter with the smaller diameter wire being utilized for the smaller diameter tubular members as, for example, 12 to 15 millimeters in diameter and the larger tubular members as, for example, those having a 30 millimeter diameter using the larger wire sizes.

It has been found that the spring force created by the helical coils **136** at the apices **133** is largely determined by the diameter of the wire. The greater the diameter of the wire, the greater the spring force applied to the struts or legs **137** and **138** of the vees. Also, the longer the distances are between the apices lying in planes **141** and **142**, the smaller the spring force that is applied to the legs or struts **137** and **138**. It therefore has been desirable to provide a spacing between the outer extremities of the legs or struts of approximately one centimeter, although smaller or larger distances may be utilized.

The hook-like elements **151** at the proximal and distal extremities of the graft **121** are angled at suitable angles with respect to longitudinal axis of the tubular member **122**. The hook-like elements face towards each other to facilitate holding the graft **121** in place in the vessel of the patient. Thus, the hook-like elements **151** on the proximal extremity **123** are inclined from the longitudinal axis by 55° to 80° and preferably about 65° toward the distal end of the graft **121** in the direction of blood flow. The hook-like elements **151** on the distal end **124** of the graft or implant **121** are inclined from the longitudinal axis by 30° to 90° and preferably 85° in a direction towards the proximal end **123** and opposite the direction of blood flow. The hook-like elements **151** serve as attachment means at each end of the graft **121** and when implanted oppose migration of the graft.

The helical coil springs **136** placed at the nodes or apices **133** of the vees **132** of the spring means **131** serve to facilitate compression of the graft when it is desired to place the same within the capsule **36** as hereinafter described. The compression of the graft is accomplished by deformation of the coil springs **136** within their elastic limits. Placing the nodes or apices **133** in different planes greatly aids in reducing the size to which the graft can be reduced during compression of the same by staggering or offsetting the hooks or hook-like elements **151**. This also helps to prevent the hook-like elements from becoming entangled with each other. The natural spring forces of the helical coil springs **136** provided in the apices of the vees serves to expand the graft to its expanded position as soon as the graft is free of the capsule **36**. By way of example, as shown in the drawings, three apices or nodes can be provided in the plane **141** and three apices or nodes in the plane **142** which are offset longitudinally with respect to the nodes in plane **141** and six nodes in plane **143**. The placement of six nodes or apices **133** in the plane **143** does not interfere with the compression of the graft **151** because there are no hook-like elements **151** at these nodes or apices **133** in the plane. For larger diameter grafts, the spring means **131** can be provided with additional apices or nodes **133** to enhance attachment as hereinafter described.

Radiopaque marker means is carried by the graft **121**. The radiopaque marker means takes the form of four radiopaque markers **156**. The radiopaque markers are made of a suitable material such as a platinum tungsten alloy wire of a suitable diameter such as 0.003 inches which is wound into a spring coil having a diameter of 0.040 inches and having a length of 0.125 inches. These markers **156** are secured to the tubular member **122** by the same suture material **146**. Two of the radiopaque markers **156** are located on the tubular member **122** in spaced apart aligned positions longitudinally of and parallel to the longitudinal axis of the tubular member **122** but are adjacent to the apices **133** lying in the planes **143** at the opposite ends **123** and **124** of the graft **121**. Thus the markers **156** are spaced a maximum distance apart on the graft but still within the attachment means carried by the graft **121**. Another set of two markers is provided on the tubular member **122** spaced 180° from the first set of two markers along the same longitudinal axis (see FIG. **15**). By placing the markers in these positions, it is possible to ascertain the position of the graft **121** and at the same time to ascertain whether or not there has been any twist in the graft between the first and second ends of the graft. In other words when there is no twist in the graft **121** the four markers **156** form four corners of a rectangle. However, if a twist in the graft **121** is present, then the pair of markers **156** at one end of the graft **121** have a different spacing transverse of the longitudinal axis of the graft then the other pair of markers **156** at the other end.

In order to ensure that the graft **121** will not become dislodged after it has been implanted, it may be desirable to provide alternative hook-like elements to ensure that the graft will remain in place after it has been implanted. An alternative hook-like element **161** is shown in FIG. **12** in which each of the hook-like elements **161** has been provided with a barb **162** which extends outwardly from the main body **163** of the hook-like element. Thus by way of example, the main body **163** can be formed of a wire having a suitable diameter such as 0.012 inches with the diameter of the hook-like body in the vicinity of the barb **162** having a suitable diameter such as 0.010 inches. The hook-like element can have a suitable length such as 1.5 millimeters.

Another alternative hook-like element **166** is shown in FIG. **13** which has a body **167** of a suitable diameter such as 0.010 inches with a conical tip **168**. Outwardly extending spring-like ribbons **169** having a suitable dimension such as 0.002 inches in thickness and a width of 0.008 inches are secured by suitable means such as welding to the body **167**. As shown, the spring-like elements **169** can flare outwardly so that in the event any attempt is made to withdraw or retract the hook-like element, the spring-like ribbons **169** will become firmly imbedded in the tissue to inhibit such removal. It also should be appreciated that other means can be provided on the hook-like elements to inhibit withdrawal of the same from tissue once they have become embedded in the same. Thus, by way of example as shown in FIG. **13**, helical or annular serrations **170** can be provided on the hook body to inhibit such withdrawal. In each of the embodiments with the hook-like elements it can be seen that the profile of the hook-like element is kept to a minimum during the time that it is penetrating the tissue.

The endovascular grafting apparatus **11** is shown assembled for use as shown in FIG. **1** typically in the manner it would be packaged for shipment to a hospital or doctor for use. As shown in FIG. **1**, the graft has been compressed or squeezed onto the balloon shaft **62** and is positioned within the capsule **36** with the pusher button **66** being positioned immediately to the rear or proximal to the proximal extremity **123** of the graft **121** (see FIG. **14**). In this connection it should be appreciated in order to minimize the diameter of the graft to make use of a capsule of minimum diameter, the balloon catheter should be of minimum profile. The balloon shaft **62** is threaded on the wire **98** and extends into the rigid tube **97** of the pusher rod **96**. The balloon **64** is disposed

forwardly or distally of the capsule **36**. The wire **98** is in engagement with the plug **78** in the distal extremity of the balloon **64**.

When it is desired to perform a procedure utilizing an endovascular or system grafting apparatus **11** of the present invention to perform the method of the present invention, an apparatus is selected which has the appropriate size of graft **121** within the capsule **36**. The length and size of the graft **121** is determined by the size of the vessel of the patient in which the aneurysm has occurred. Typically the size of the graft **121** is selected so that it has sufficient length to span approximately one centimeter proximal and one centimeter distal of the aneurysm so that the hook-like elements **151** of the graft can seat within normal tissue of the vessel on both sides of the aneurysm. Thus, the graft should be two centimeters longer than the aneurysm being repaired. The diameter is selected by measuring the vessel in a preimplant procedure by conventional radiographic techniques and then using a graft **121** of the next larger one millimeter size. During the preimplant fluoroscopy procedure, using a conventional pigtail catheter, the locations of the renal arteries are ascertained so that they will not be covered by the graft **121** when it is implanted.

Let it be assumed that the patient on whom the operation is to take place has been prepared in a conventional manner by use of a dilator with a guide wire and a sheath (not shown) to open the femoral artery or vessel of the patient. The apparatus **11** is inserted into the sheath which has previously been placed in the femoral artery of the patient. This insertion can be accomplished without a guide wire, with a guide wire or by the use of a soft sheath previously positioned over a guide wire. With the construction shown in FIG. **3**, the balloon **64** with its guide wire **74** followed by the capsule **36** is introduced into the femoral artery and advanced in the femoral artery by the physician grasping the proximal extremity of the capsule catheter **12** and the cap of the pusher rod assembly **96**. The balloon **64** is twisted into a helix to place it in its helical memory condition to reduce its profile to a minimum. The balloon **64** and the capsule **36** are advanced by the physician into the desired position by use of the guide wire **74**. The physician slightly rotates the apparatus **11** in the direction of the balloon twist to maintain the helical twist in the balloon **64** and pushes on the apparatus **11**.

Typically a desired position will be within the abdominal aorta with the proximal extremity **123** of the graft **121** and at least one centimeter distal to the lower renal artery. At about the same time, the physician should rotate the capsule catheter **12** to rotate the capsule **36** and the graft therein in order to orient the radiopaque graft markers **156** such that the distance between the pair of markers **156** at each end of the graft **121** is maximized. As soon as the capsule **36** is in the desired position, the Touhy Borst O-ring assembly **27** is opened to permit free movement of the pusher rod assembly **96**. With the balloon **64** riding well beyond or just distal of the end of the capsule **36**, one hand of the physician is used for holding the pusher rod assembly **96** by engaging the cap **101** and holding the pusher rod stationary and pulling outwardly on the capsule catheter **12** with the other hand to cause relative movement between the pusher rod assembly **96** in the inner liner **17** and the capsule **36**. This causes the wire **98** of the pusher rod assembly **96** to engage the plug **78** of the balloon catheter assembly **61**. The pusher button **66** carried by the balloon catheter shaft **62** which is in engagement with the proximal extremity of the graft **121** in the region of the nodes **133** in the plane **143** forces the graft **121** out of the capsule **36** as the capsule is withdrawn. As soon as the proximal extremity of the graft **121** has cleared the distal extremity of the capsule, the proximal extremity **123** of the graft **121** pops outwardly under the force of the spring means **131** carried by the proximal extremity **123** of the graft **121** and will spring into engagement with the vessel wall **166**.

As soon as this has occurred, the pusher rod assembly **96** is pulled out of the capsule catheter **12**. While the physician uses one hand to hold the capsule catheter **12** stationary, the catheter shaft **62** which is protruding proximally of the capsule catheter **12** is grasped by the other hand and pulled rearwardly to position the proximal extremity of the balloon **64** into the proximal extremity **123** of the graft **121** as shown in FIG. **15**. A conventional hand operated syringe and Tuohy Borst adapter (not shown) are then taken and attached to the proximal extremity of the balloon catheter shaft **62**. The balloon **64** is then expanded by introducing a suitable gas such as carbon dioxide or a dilute radiopaque liquid from the syringe to urge the hook-like elements **151** outwardly to firmly seat within the vessel wall **166**.

As soon as this has been accomplished, the capsule catheter **12** is pulled out further with the balloon **64** still inflated until approximately one-half or more of the graft **121** has cleared the capsule **36**. Leaving the balloon inflated provides additional security to ensure that the proximally seated graft **121** will not move during retraction of the capsule **36**. The balloon **64** is then deflated. The balloon **64** is then retracted further into the graft and reinflated to ensure that a good attachment is made between the hook-like elements **151** carried by the spring means **131** at the proximal extremity **123** of the graft **121**. The capsule **36** can then be removed in successive steps and the balloon deflated, retracted and reinflated. The capsule catheter **12** can then be withdrawn completely to the distal portion of the abdominal aorta to permit the distal extremity **124** of the graft **121** to move out completely of the capsule **36** and to permit its distal extremity **124** to spring open and have the hook-like elements **151** move into engagement with the vessel wall **166**. Thereafter, the balloon **64** is again deflated. The balloon catheter shaft is then grasped by the physician's hand and pulled rearwardly to center the balloon **64** within the distal extremity **124** of the graft **121**. The balloon **64** is reinflated to set the hook-like elements **151** at the distal extremity of the graft into the vessel wall **166**. As soon as this has been completed, the balloon **64** is again deflated. The balloon catheter assembly **61** is then removed from the femoral artery.

The entire procedure hereinbefore can be observed under fluoroscopy. The relative positioning of the graft **121** and the balloon **64** can be readily ascertained by the radiopaque attachment means **131**, radiopaque markers **156** provided on the graft, and the radiopaque portions of the balloon **64**. If any twisting of the graft **121** has occurred between placement of the proximal hook-like elements and the distal hook-like elements, this can be readily ascertained by observing the four markers **156**. Adjustments can be made before ejection of the distal extremity **124** by rotation of the capsule catheter **12** to eliminate any twisting which has occurred. In addition, the distance between the pairs of radiopaque markers **156** longitudinal of the axis is measured on the flat plate abdominal x-ray made during the procedure and compared with the known distance between the pairs of markers **156** longitudinal of the axis of the graft **121** ascertained during manufacture of the graft **121**. This is done to ascertain whether longitudinal accordioning of the graft **121** has occurred.

Post implant fluoroscopy procedures can be utilized to confirm the proper implantation of the device by the use of

a conventional pigtail catheter. Thereafter the sheath can be removed from the femoral artery and the femoral artery closed with conventional suturing techniques. Tissues should begin to grow into the graft within two to four weeks with tissue completely covering the interior side of the graft within six months so that no portion of the graft thereafter would be in communication with the blood circulating in the vessel. This establishes a complete repair of the aneurysm which had occurred.

It is apparent from the foregoing that there has been provided a new and improved endovascular grafting apparatus, system and method for utilizing the same. The construction of the capsule catheter is such that it has sufficient rigidity to ensure easy and ready placement of the capsule carried thereby. The pusher rod assembly which is used therein is constrained in such a manner so that relatively great forces can be applied to the pusher rod assembly even though the pusher wire has only a diameter of 0.018 inches. The tube **69** also serves to provide a confined space for the wire **98** to sit in while a high compressive force is being applied to the wire. The tube **69** prevents the wire from buckling or kinking within the balloon. It also prevents the balloon from collapsing during insertion of the apparatus **11**. The capsule **36** which is provided as a part of the catheter assembly is formed of metal which makes it possible to utilize grafts having very sharp hook-like elements without any danger of them penetrating the capsule during the time that the capsule is being introduced into the vessel of the patient. In addition, the capsule since it is flexible and can bend through angles up to approximately 120° in order to readily negotiate the bends which occur in the vessel of the patient. The balloon catheter is made in such a way that the balloon can be readily introduced into the vessel because of the rigid tubular member provided within the balloon while at the same time permitting inflation and deflation of the balloon through the same tubular member. The pusher button **66** is mounted on the balloon catheter in such a manner so that it cannot shift at all in one direction or proximally longitudinally of the balloon catheter. The pusher button **66** also can only move a limited distance towards the balloon **64** until it reaches the balloon **64**. In one embodiment shown in FIG. **3** the pusher button **66** cannot move proximally or distally whereas in another embodiment shown in FIG. **4** it cannot move proximally but can move distally. This is an advantage when retracting the proximal extremity of the balloon **64** into the graft **121** for placement of the proximal hook-like elements **151** because the pusher button **66** can slide forwardly or distally of the shaft **62** as the shaft **62** is retracted to bring the proximal extremity with the balloon **64** into the graft **121**. Thus the pusher button **66** will not be pulled back into the capsule **36** and catch on the collapsed distal extremity **124** of the graft **121** within the capsule **36**. The balloon is also mounted on the distal extremity of the balloon catheter in such a manner so that the balloon cannot leak. The balloon catheter can be provided with either a fixed guide wire, or if desired, a movable guide wire so that an over-the-wire system can be utilized.

The capsule **36** is constructed in such a manner so that it is semi-radiopaque allowing it to be visualized while still permitting observation of the graft within the capsule and the attachment means provided on the graft. The capsule **36** is also constructed in such a manner so that the hooks which are provided on the graft will readily slide in one direction over the wraps or turns of the capsule without hanging up or catching onto the individual wraps of the ribbon forming the capsule.

The graft which is provided with the helical coil springs at each of the nodes is particularly advantageous in that it permits compression of the graft into a very small size without causing permanent deformation of the attachment means. Because of the spring forces provided by the attachment means, it is possible that the grafts can be implanted without the use of an inflatable balloon for forcing the hook-like elements into the tissue of the vessel. However, at the present time, it is still believed to be desirable to utilize the balloon to ensure that the hook-like elements are firmly implanted into the wall of the vessel so as to inhibit migration of the graft within the vessel.

What is claimed is:

1. An expandable intraluminal vascular graft for implanting in a body vessel comprising a deformable tubular member having proximal and distal ends and a wall extending between the proximal and distal ends, the wall being formed of a flexible material capable of receiving tissue ingrowth, said tubular member being capable of assuming a first position of reduced size for insertion into the body vessel and a second expanded position, expandable yieldable spring means respectively secured to the proximal and distal ends of the tubular member, said yieldable spring means urging said tubular member from said first position of reduced size to a second expanded position and attachment means secured to said expandable spring means for attachment to the body vessel.

2. A graft as in claim **1** wherein said expandable spring means is in the form of substantially vee-shaped spring portions having apices and legs extending from the apices, the spring means having a helical torsion spring at each apex yieldably urging said legs in a direction to open the vee-shaped spring portions.

3. A graft as in claim **1**, wherein said expandable spring means includes a plurality of interconnected vees with each vee having an apex and with coil spring means formed at each apex serving to expand the vees in an outward direction along the plane of each of the vees.

4. A graft as in claim **3**, wherein the attachment means is in the form of hook elements secured to the spring means proximate the apices of the vees.

5. A graft as in claim **4**, wherein the apices of the vees of each of the expandable spring means lie in first and second planes spaced along a longitudinal axis of the graft.

6. A graft as in claim **5**, herein the apices in the first and second planes are spaced beyond the end of the tubular member and wherein the hook elements are mounted on the vees proximate the apices lying in the first and second planes.

7. A graft as in claim **6**, wherein the apices in one of the first and second planes are offset circumferentially with respect to the apices in the other of the first and second planes.

8. A graft as in claim **7**, wherein at least three apices are provided in the first plane and at least three apices are provided in the second plane.

9. A graft as in claim **1**, further comprising radiopaque marker means secured to the wall of the tubular member, said marker means including first and second aligned radiopaque markers spaced apart longitudinally of the tubular member to permit ascertaining whether any twisting of the tubular member has occurred.

10. A graft as in claim **9**, wherein the first and second markers are positioned adjacent apices of the yieldable spring means.

11. A graft for emplacement by a balloon catheter, said graft comprising:

a tubular member having a first end and a second end;

a first attachment system connected to and positioned proximate the first end of said tubular member, said first

attachment system including a plurality of support members each having two legs joined to form an apex, each leg being joined to the legs of adjacent support members to form a circular arrangement of the support members about a central axis and operable between a first collapsed position and a second expanded position; and

first wall engaging members connected to an positioned proximate the first end of said tubular member.

12. A graft as in claim **11**, wherein said first attachment system is self-expanding.

13. A graft as in claim **12**, wherein each of the legs of the support members are formed of a spring material and are substantially straight.

14. A graft as in claim **13**, wherein each of said first wall engaging members are secured to a respective on leg of one of the support members.

15. A graft as in claim **14**, wherein the support members are vee-shaped.

16. A graft as in claim **15**, wherein each of said first wall engaging members have tip portions extending at an angle from the central axis of about 55 degrees to about 80 degrees toward the second end of said tubular member.

17. A graft as in claim **15**, wherein each of said first wall engaging members are attached to a leg of a support members and have tip portions extending at an angle from the central axis of about 65 degrees toward the second end of said tubular member.

18. A graft as in claim **14**, wherein the legs extend away from the apex so that said first attachment system is sinusoidal in shape.

19. A graft as in claim **11**, further comprising a second attachment system connected and positioned proximate the second end of said tubular member, and second wall engaging members connected to an positioned proximate the second end of said tubular member, said second attachment system including a plurality of support members each having two legs joined to form an apex, each leg being joined to the legs of adjacent support members to form a circular arrangement of support members about a central axis and operable between a first collapsed position and a second expanded position.

20. A graft as in claim **19**, wherein the support members of said second attachment system are self-expanding and the second wall engaging members are attached to a respective one leg of one of the support members of the second attachment system and have tip portions extending at an angle from the central axis of about 30 degrees to about 90 degrees toward the first end of said tubular member.

21. A graft as in claim **19**, wherein the support members of said second attachment system are self-expanding and the second wall engaging members are attached to a respective leg of one of the support members, of the second attachment system and have tip portions extending at an angle from the central axis of about degrees toward the first end of said tubular member.

22. A graft as in claim **11**, further comprising a radio-opaque seam stitched in said tubular member in a longitudinal manner.

23. A graft for intraluminal placement in a corporeal lumen, said graft comprising:

a tubular member having a first end and a second end;

a first attachment system positioned proximate the first end of said tubular member, said first attachment system including a plurality of legs joined by a plurality of apices, the legs being configured in a circular arrangement; and

a second attachment system positioned proximate the second end of said tubular member, said second attachment system including a plurality of legs joined by a plurality of apices, the legs being configured in a circular arrangement.

24. The graft of claim **23**, further comprising a plurality of lumen engaging members secured to the legs of the first and second attachment systems.

25. The graft of claim **24**, wherein said first and second attachment systems are self-expanding.

26. The graft of claim **25**, wherein the apices are each configured to form a helical spring.

27. The graft of claim **23**, further comprising a plurality of radiopaque markers secured to said tubular member.

28. An expandable intraluminal vascular graft comprising:

a deformable tubular member having proximal and distal ends, said tubular member having a first reduced position and a second expanded position;

an expandable spring arrangement secured to the proximal and distal ends of the tubular member, said expandable spring arrangement capable of urging said tubular member from the first reduced position to the second expanded position; and

an attachment system secured to said expandable spring arrangement for securing said tubular member to a wall of a body vessel.

29. A graft as in claim **28**, wherein said expandable spring arrangement is in the form of substantially vee-shaped spring portions having apices with legs extending from the apices.

30. A graft as in claim **29**, wherein said attachment system comprises wall engaging members secured to the legs of said expandable spring arrangement.

31. A graft as in claim **30**, wherein each of the apices of said expandable spring arrangement comprise a coil spring arrangement.

32. A graft as in claim **30**, wherein the apices of said expandable spring arrangement extend beyond the proximal and distal ends of said tubular member.

33. A graft as in claim **30**, having a plurality of radiopaque markers secured to said tubular member, said markers including first and second aligned radiopaque markers spaced apart longitudinally of said tubular member.

34. A graft as in claim **33**, wherein the first aligned radiopaque marker is positioned adjacent the proximal end of said tubular member and the second aligned radiopaque marker is positioned adjacent the distal end of said tubular member.

35. An expandable intraluminal vascular graft for implanting in a body vessel having a wall, the graft comprising:

conforming means for engrafting a body vessel, said conforming means having proximal and distal extremities; and

attachment means secured to the proximal and distal extremities of said conforming means for engaging the body vessel, said attachment means being self-expanding and having engaging means for securing said conforming means to a wall of the body vessel.

* * * * *

UNITED STATES PATENT AND TRADEMARK OFFICE

CERTIFICATE OF CORRECTION

PATENT NO. : 5,562,728

DATED : October 8, 1996

INVENTOR(S) : Harrison M. Lazarus, Ronald G. Williams, Wesley D. Sterman and Alec A. Piplani

It is certified that error appears in the above-indentified patent and that said Letters Patent is hereby corrected as shown below:

Column 14, Claim 2, Line 25, after "claim 1", add --,--.

Column 15, Claim 11, Line 8, change "an", to read --and--.

Column 15, Claim 14, Line 16, change "on", to read --one--.

Column 15, Claim 17, Line 25, change "attached to a leg of a support", to read --attached to a respective one leg of one of the support--.

Column 15, Claim 19, Line 35, change "an", to read --and--.

Column 15, Claim 21, Line 53, before "leg", add --one--.

Front page, after Listing of Inventors, add "Assignee: Endovascular Technologies, Inc., Menlo Park, California"

Signed and Sealed this

Eighth Day of July, 1997

Bruce Lehman

Attest:

BRUCE LEHMAN

Attesting Officer

Commissioner of Patents and Trademarks