US006986778B2

(12) **United States Patent**
Zadno-Azizi

(10) **Patent No.: US 6,986,778 B2**
(45) **Date of Patent: Jan. 17, 2006**

(54) **EXCHANGE METHOD FOR EMBOLI CONTAINMENT**

(75) Inventor: **Gholam-Reza Zadno-Azizi**, Newark, CA (US)

(73) Assignee: **Medtronic Vascular, Inc.**, Santa Rosa, CA (US)

(*) Notice: Subject to any disclaimer, the term of this patent is extended or adjusted under 35 U.S.C. 154(b) by 801 days.

(21) Appl. No.: **09/768,031**

(22) Filed: **Jan. 23, 2001**

(65) **Prior Publication Data**

US 2002/0065507 A1 May 30, 2002

Related U.S. Application Data

(63) Continuation of application No. 09/049,712, filed on Mar. 27, 1998, now Pat. No. 6,544,276, which is a continuation-in-part of application No. 09/026,106, filed on Feb. 19, 1998, now Pat. No. 6,312,407, which is a continuation-in-part of application No. 08/975,723, filed on Nov. 20, 1997, now Pat. No. 6,050,972, which is a continuation-in-part of application No. 08/812,139, filed on Mar. 6, 1997, now abandoned, which is a continuation-in-part of application No. 08/650,464, filed on May 20, 1996, now abandoned.

(51) **Int. Cl.**
A61M 29/00 (2006.01)

(52) **U.S. Cl.** **606/200**; 606/194; 604/96.01; 604/107

(58) **Field of Classification Search** 604/96.01–109, 604/528, 19, 35; 606/1, 108, 151, 159, 167, 606/180, 190–200, 170, 171; 600/434, 585
See application file for complete search history.

(56) **References Cited**

U.S. PATENT DOCUMENTS

3,087,492	A	4/1963	Garth
3,211,150	A	10/1965	Foderick
4,517,979	A	5/1985	Pecenka
4,540,404	A	9/1985	Wolvek
4,573,966	A	3/1986	Weikl et al.
4,602,633	A	7/1986	Goodfriend et al.
4,610,662	A	9/1986	Weitel et al.

(Continued)

FOREIGN PATENT DOCUMENTS

EP	0 380 873 A2	8/1990
EP	0 638 327 A1	2/1995
WO	WO 92/13589	8/1992
WO	WO 96/01591	1/1996
WO	WO 97/27896	8/1997
WO	WO 97/44082	11/1997
WO	WO 97/44084	11/1997
WO	WO 97/44085	11/1997
WO	WO 98/33443	8/1998
WO	WO 98/38930	9/1998
WO	WO 99/44542	9/1999

Primary Examiner—Glenn K. Dawson
(74) *Attorney, Agent, or Firm*—Knobbe Martens Olson & Bear LLP

(57) **ABSTRACT**

The present invention provides a method for exchanging catheters while containing emboli within a blood vessel such as a saphenous vein graft, coronary artery, carotid artery, or other similar vessels. A guidewire is inserted through the vasculature of a patient until it reaches a desired treatment site. A therapy catheter is then inserted over the guidewire until the distal end of the therapy catheter reaches the treatment site. The guidewire has a distally mounted balloon which is inflated to occlude the blood vessel. Then, the therapy catheter provides means for treating the vessel at the treatment site. After treatment, the therapy catheter is removed from the guidewire and exchanged with an aspiration catheter which rides over the guidewire until the distal end of the aspiration catheter reaches the treatment site. The aspiration catheter applies negative pressure to remove any emboli formed by the treatment procedure.

15 Claims, 37 Drawing Sheets

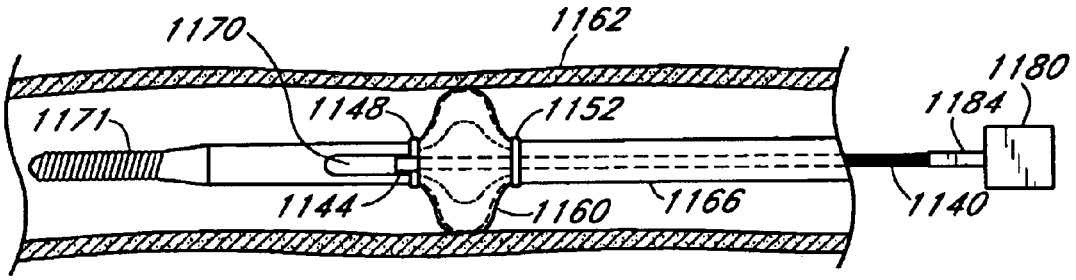

U.S. PATENT DOCUMENTS

4,655,746	A	4/1987	Daniels et al.	
4,748,982	A	6/1988	Horzewski et al.	
4,781,677	A	11/1988	Wilcox	
4,794,928	A	1/1989	Kletschka	
4,808,153	A	2/1989	Parisi	
4,827,941	A	5/1989	Taylor et al.	
4,842,579	A	6/1989	Shiber	
4,846,193	A	7/1989	Tremulis et al.	
4,867,742	A	9/1989	Calderon	
4,884,573	A	12/1989	Wijay et al.	
4,911,163	A	3/1990	Fina	
4,926,858	A	5/1990	Gifford et al.	
4,932,413	A	6/1990	Shockey et al.	
4,944,740	A	7/1990	Buchbinder et al.	
4,947,864	A	8/1990	Shockey et al.	
4,955,385	A	9/1990	Kvalo et al.	
4,976,689	A	12/1990	Buchbinder et al.	
5,011,469	A	4/1991	Buckberg et al.	
5,011,488	A	4/1991	Ginsburg	
5,024,651	A	6/1991	Shiber	
5,035,686	A	7/1991	Crittenden et al.	
5,040,548	A	8/1991	Yock	
5,064,416	A	11/1991	Newgard et al.	
5,071,407	A	12/1991	Termin et al.	
5,090,958	A	2/1992	Sahota	
5,092,839	A	3/1992	Kipperman	
5,100,388	A	3/1992	Behl et al.	
5,160,321	A	11/1992	Sahota	
5,163,911	A	11/1992	Sirimanne et al.	604/164.13
5,167,239	A	12/1992	Cohen et al.	600/585
5,171,221	A	12/1992	Samson	
5,234,002	A	8/1993	Chan	
5,234,407	A	8/1993	Teirstein et al.	
5,250,060	A	10/1993	Carbo et al.	
5,256,145	A	10/1993	Atkinson et al.	
5,263,932	A	11/1993	Jang	
RE34,466	E	12/1993	Taylor et al.	
5,267,958	A	12/1993	Buchbinder et al.	
5,273,527	A	12/1993	Schatz et al.	
5,279,546	A	1/1994	Mische et al.	
RE34,633	E	6/1994	Sos et al.	
5,318,527	A	6/1994	Hyde et al.	
5,320,604	A	6/1994	Walker et al.	
5,320,605	A	6/1994	Sahota	
5,324,259	A	6/1994	Taylor et al.	
5,350,397	A	9/1994	Palermo et al.	
5,358,472	A	10/1994	Vance et al.	
5,364,376	A	11/1994	Horzewski et al.	
5,368,567	A	11/1994	Lee	
5,395,335	A	3/1995	Jang	
5,413,557	A	5/1995	Solar et al.	
5,415,636	A	5/1995	Forman	
5,423,742	A	6/1995	Theron	
5,425,709	A	6/1995	Gambale	
5,449,343	A	9/1995	Samson et al.	
5,454,788	A	10/1995	Walker et al.	
5,456,667	A	10/1995	Ham et al.	
5,462,529	A	10/1995	Simpson et al.	
5,478,309	A	12/1995	Sweezer et al.	
5,484,412	A	1/1996	Pierpont	
5,490,837	A	2/1996	Blaeser et al.	
5,496,346	A	3/1996	Horzewski et al.	
5,505,699	A	4/1996	Forman et al.	
5,516,336	A	5/1996	McInnes et al.	
5,520,645	A	5/1996	Imran et al.	
5,536,252	A	7/1996	Imran et al.	
5,569,215	A	10/1996	Crocker	
5,571,169	A	11/1996	Plaia et al.	
5,607,466	A	3/1997	Imbert et al.	
5,609,574	A	3/1997	Kaplan et al.	
5,613,949	A	3/1997	Miraki	
5,634,894	A	6/1997	Magram	
5,639,274	A	6/1997	Fischell et al.	
5,645,533	A	7/1997	Blaeser et al.	
5,658,262	A	8/1997	Castaneda et al.	
5,667,521	A	9/1997	Keown	
5,681,336	A	10/1997	Clement et al.	606/159
5,690,613	A	11/1997	Verbeek	
5,693,015	A	12/1997	Walker et al.	
5,695,468	A	12/1997	Lafontaine et al.	
5,695,519	A	12/1997	Summers et al.	
5,728,123	A	3/1998	Lemelson et al.	
5,779,688	A	7/1998	Imran et al.	
5,807,330	A	9/1998	Teitelbaum	
5,814,064	A	9/1998	Daniel et al.	
5,827,324	A	10/1998	Cassell et al.	
5,833,644	A	11/1998	Zadno-Azizi et al.	
5,833,650	A	11/1998	Imran	604/509
5,849,016	A	12/1998	Suhr	
5,868,705	A	2/1999	Bagaoisan et al.	
5,876,367	A	3/1999	Kaganov et al.	
5,879,361	A	3/1999	Nash	
5,906,606	A	5/1999	Chee et al.	
5,908,405	A	6/1999	Imran et al.	
5,925,016	A	7/1999	Chornenky et al.	
6,001,118	A	12/1999	Daniel et al.	
6,013,085	A	1/2000	Howard	
6,022,336	A	2/2000	Zadno-Azizi et al.	
6,042,598	A	3/2000	Tsugita et al.	
6,050,972	A	4/2000	Zadno-Azizi et al.	604/97.01
6,053,932	A	4/2000	Daniel et al.	
6,059,814	A	5/2000	Ladd	
6,066,149	A	5/2000	Samson et al.	
6,068,623	A	5/2000	Zadno-Azizi et al.	
6,074,357	A	6/2000	Kaganov et al.	
6,080,170	A	6/2000	Nash et al.	
6,090,083	A	7/2000	Sell et al.	
6,126,635	A	10/2000	Simpson et al.	
6,129,739	A	10/2000	Khosravi	
6,135,991	A	10/2000	Muni et al.	604/509
6,152,909	A	11/2000	Bagaoisan et al.	
6,159,195	A	12/2000	Ha et al.	
6,165,200	A	12/2000	Tsugita et al.	
6,176,844	B1	1/2001	Lee	
6,251,084	B1	6/2001	Coelho	600/585

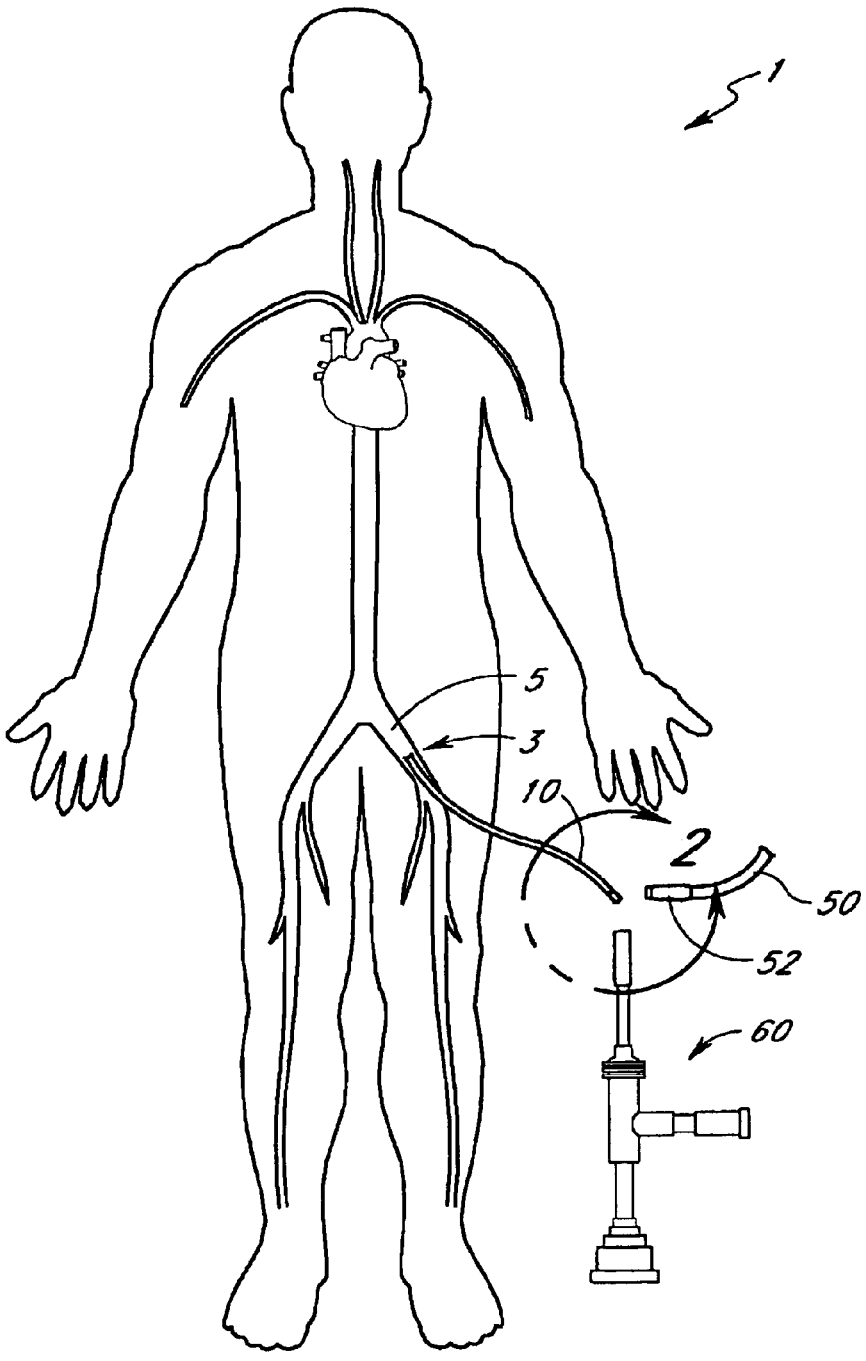

FIG. 1A

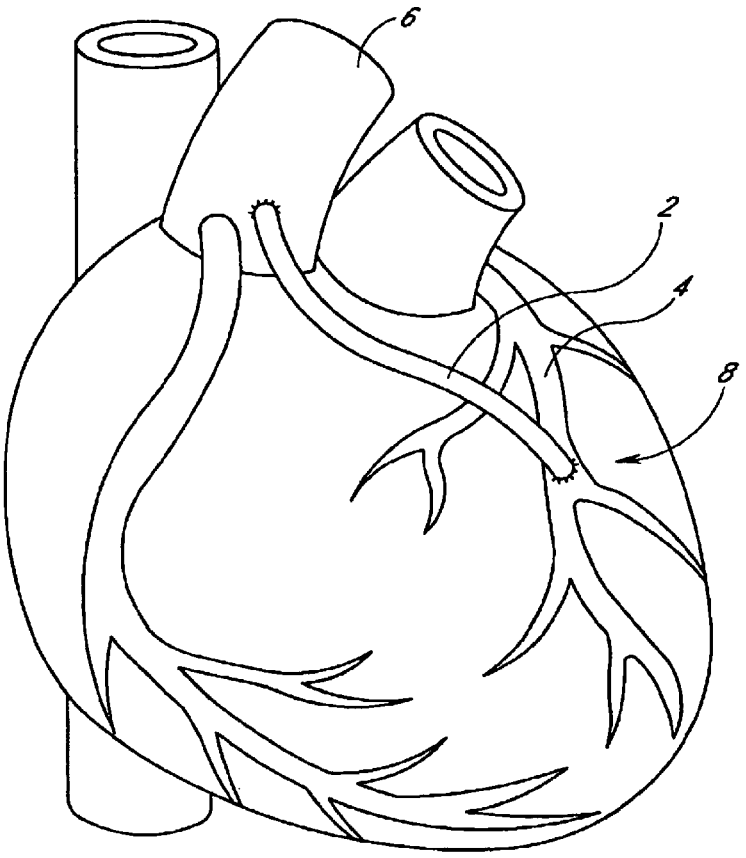

FIG. 1B

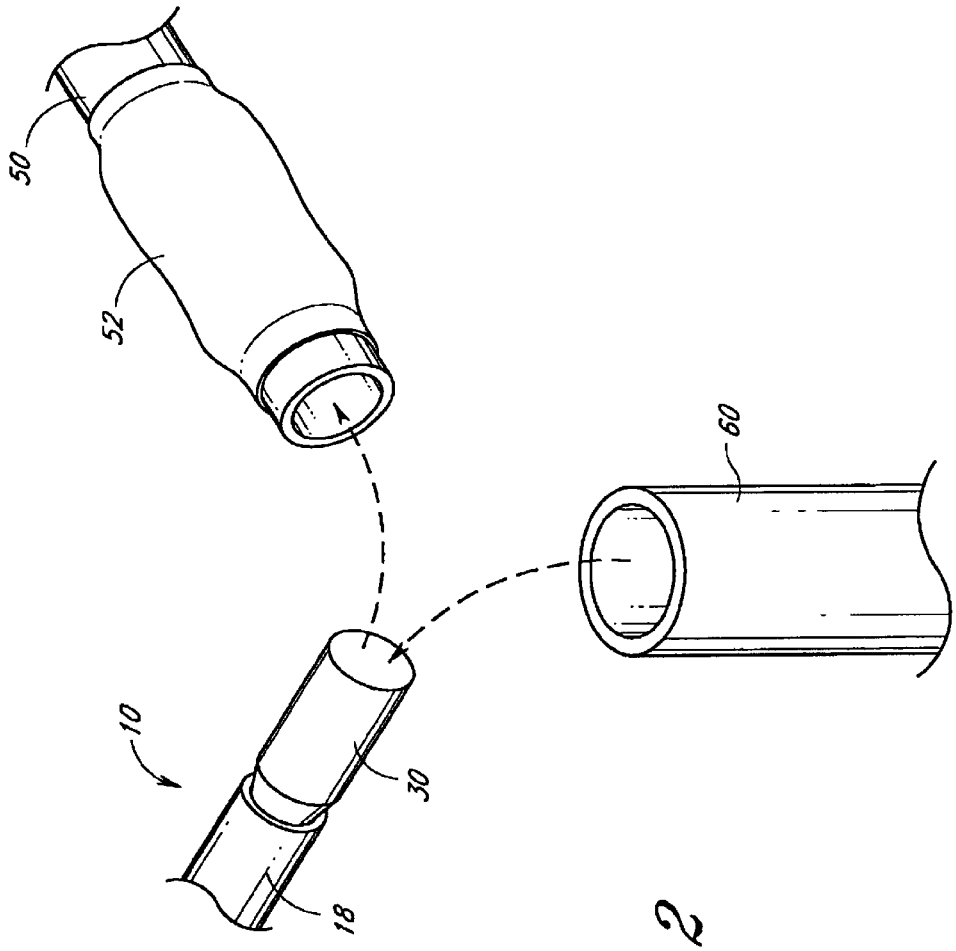

FIG. 2

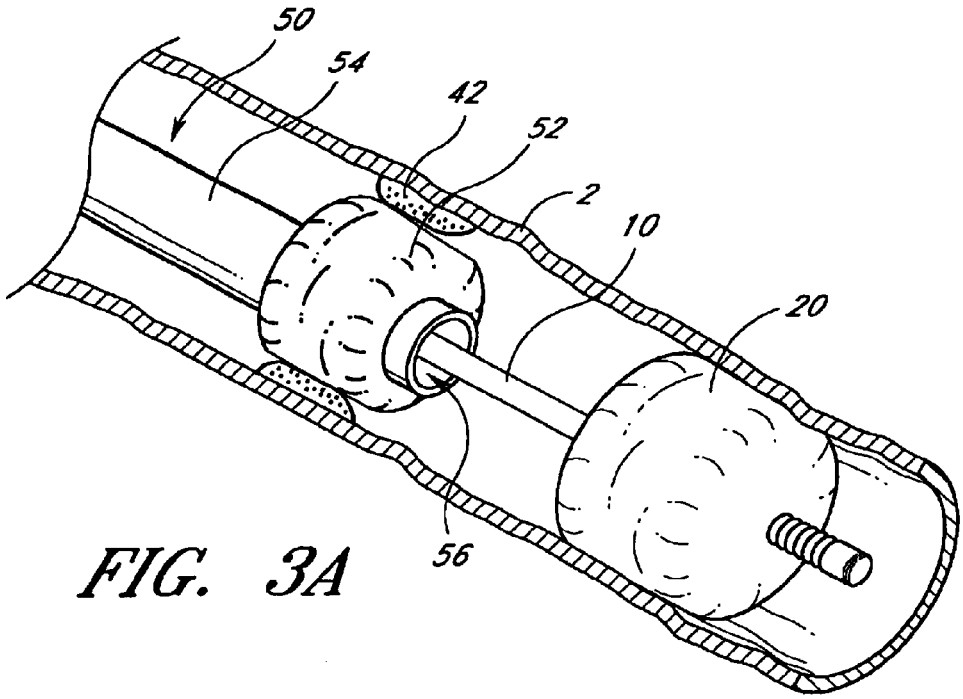

FIG. 3A

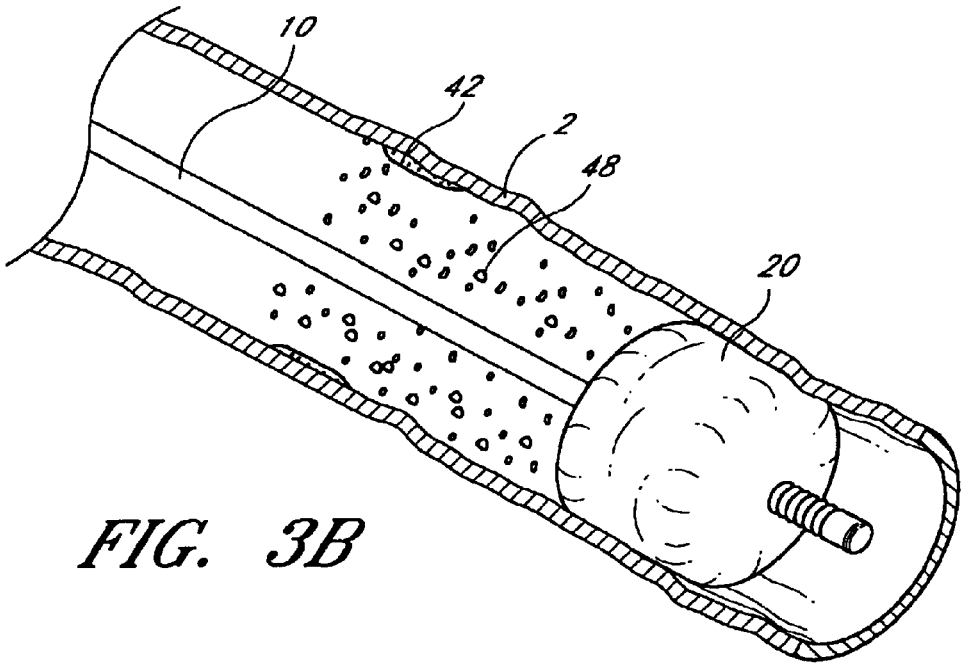

FIG. 3B

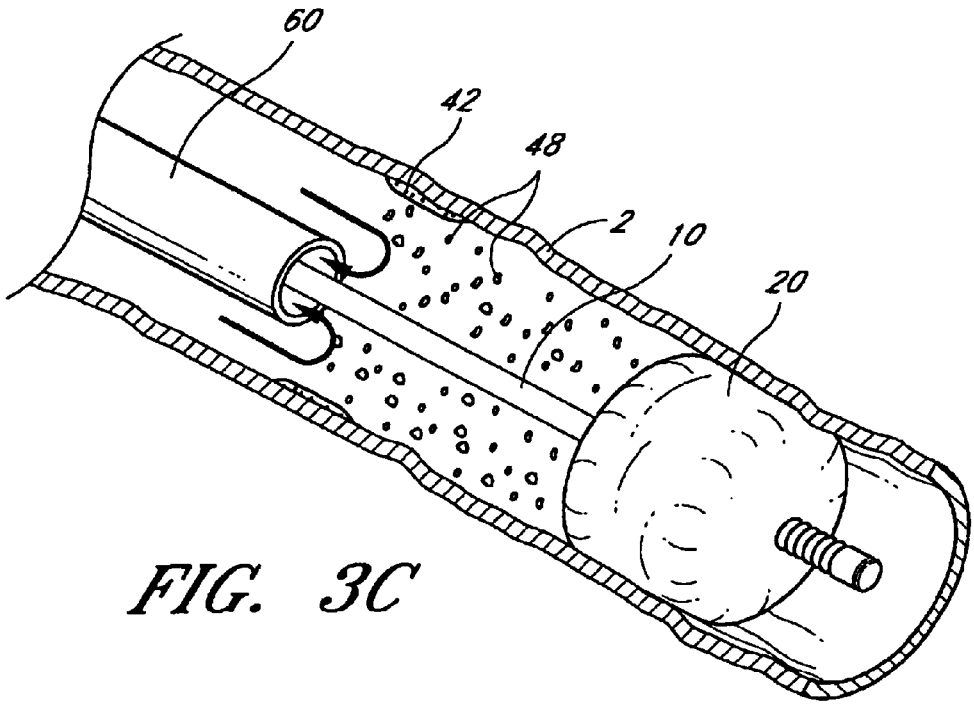

FIG. 3C

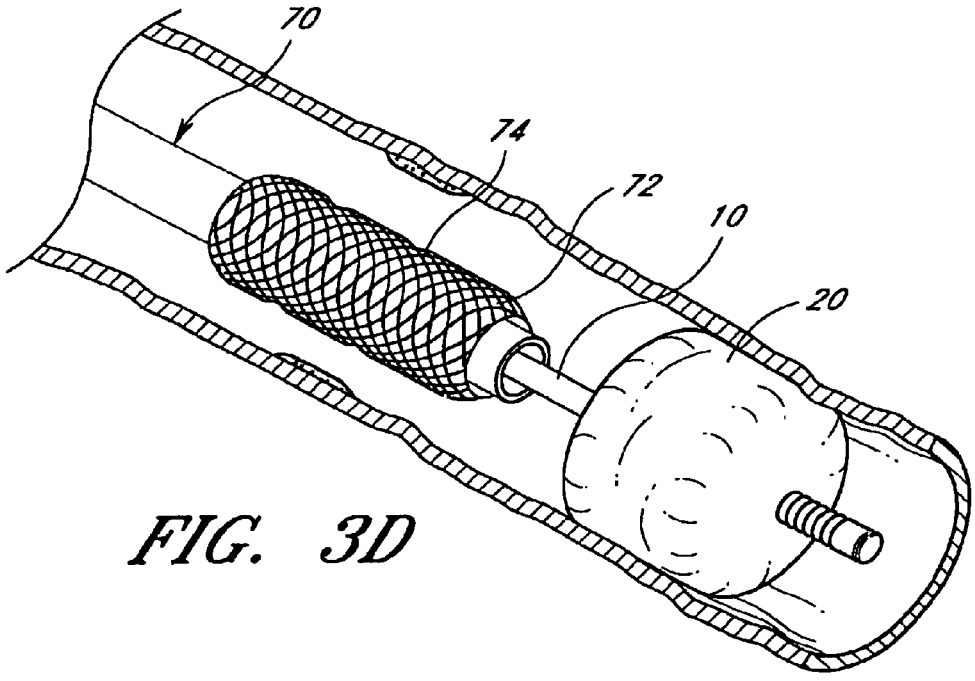

FIG. 3D

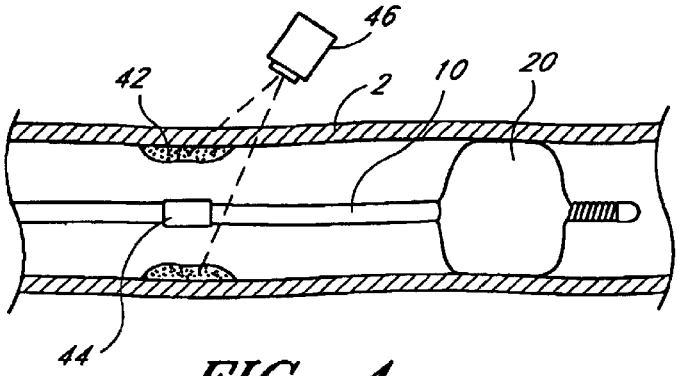

FIG. 4

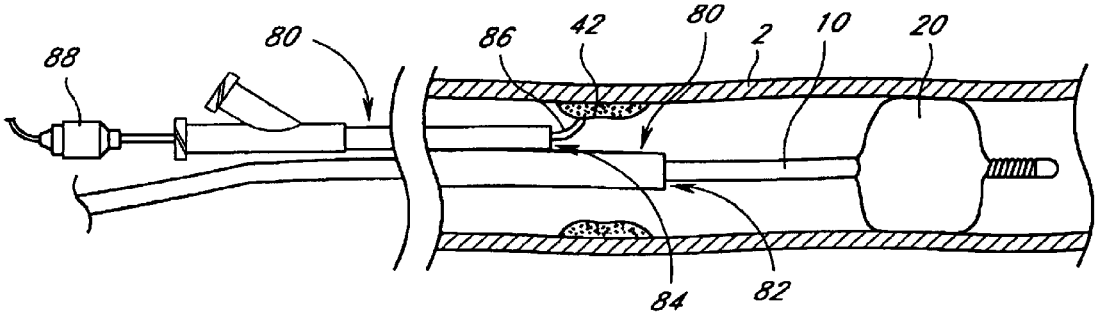

FIG. 5

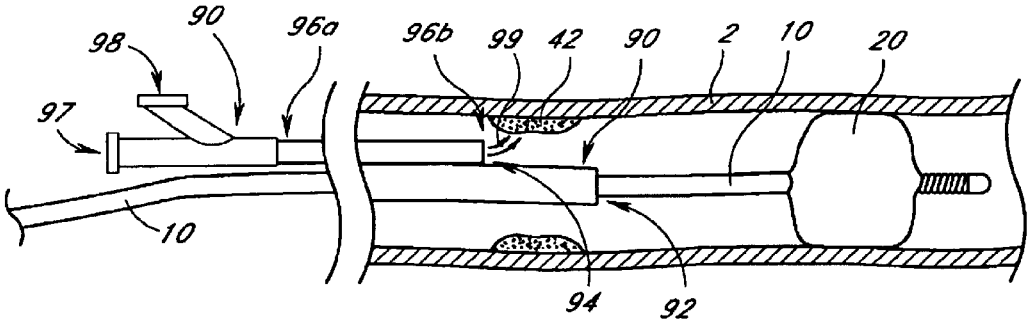

FIG. 6

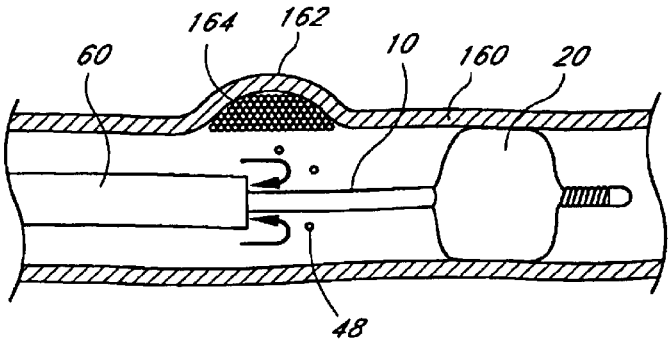

FIG. 7

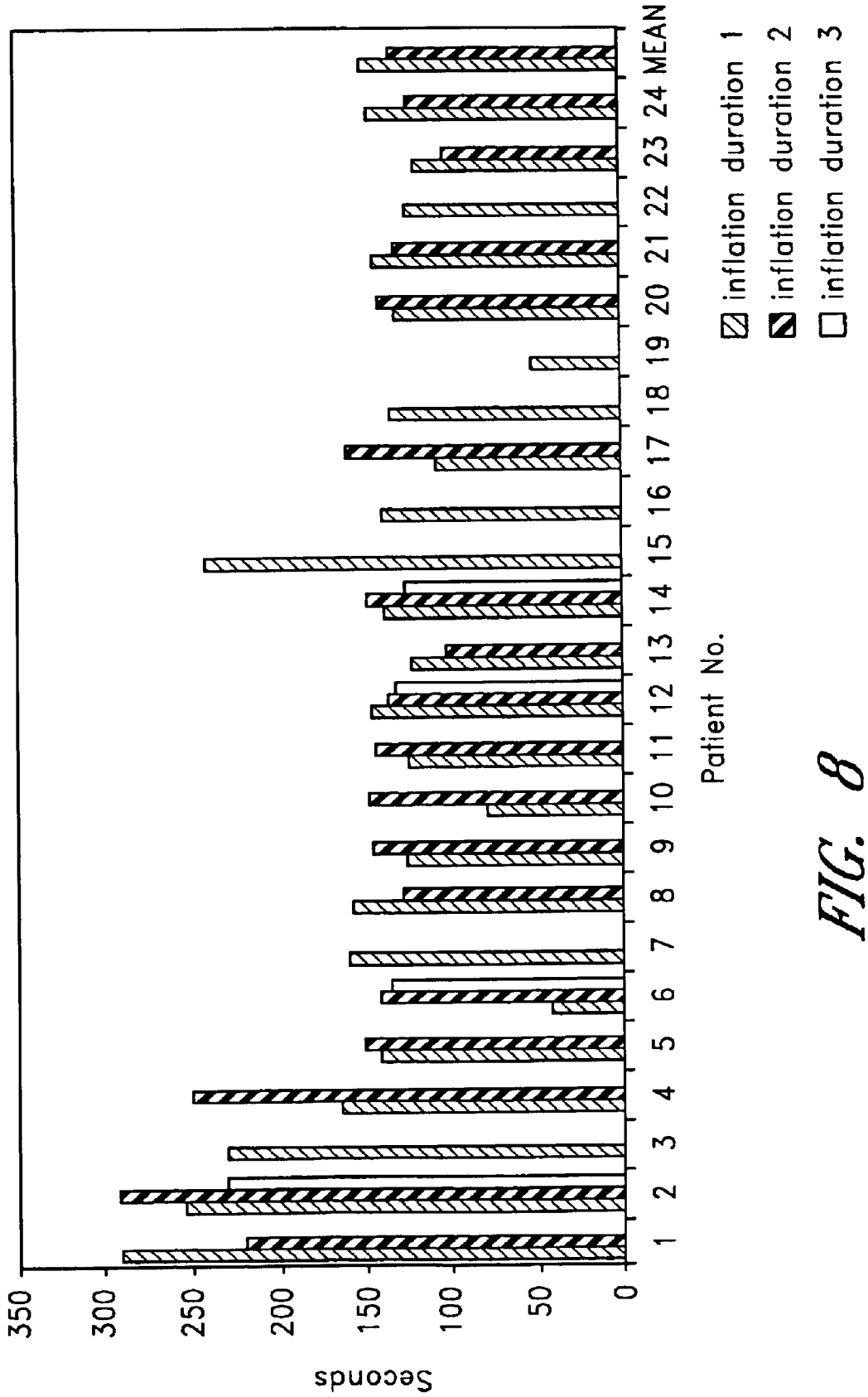
Seconds
350
300
250
200
150
100
50
0
1 2 3 4 5 6 7 8 9 10 11 12 13 14 15 16 17 18 19 20 21 22 23 24 MEAN
Patient No.
inflation duration 1
inflation duration 2
inflation duration 3

FIG. 8

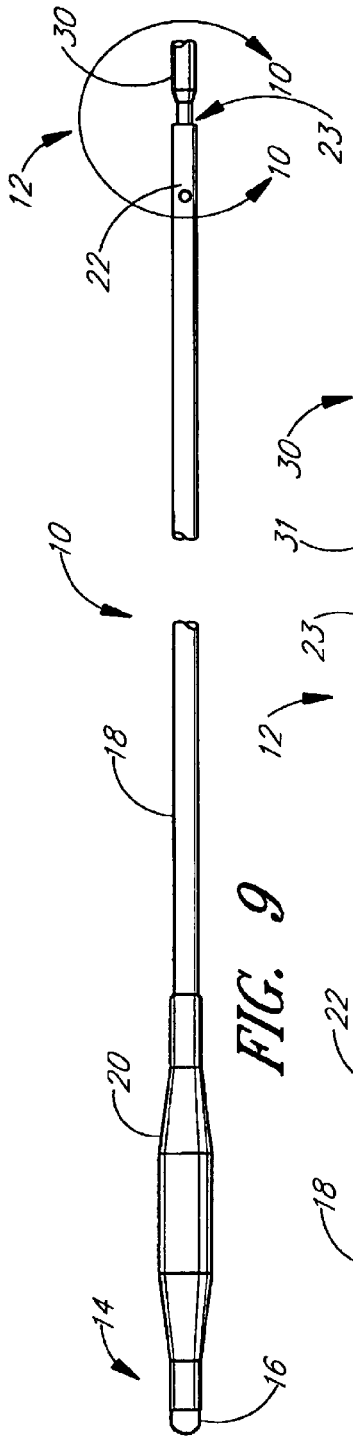

FIG. 9

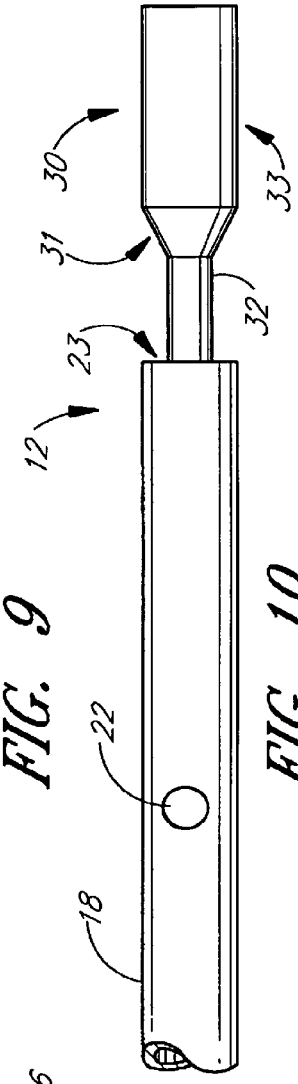

FIG. 10

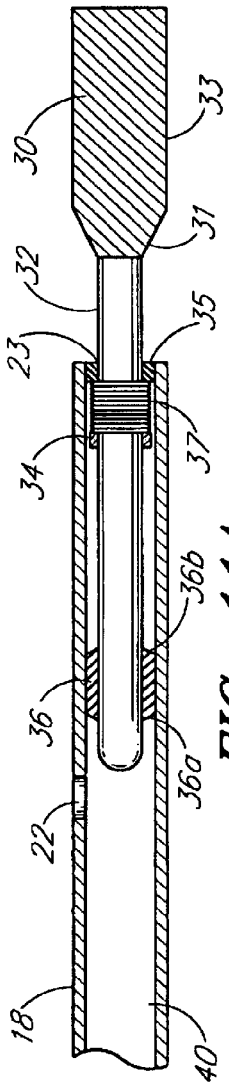

FIG. 11A

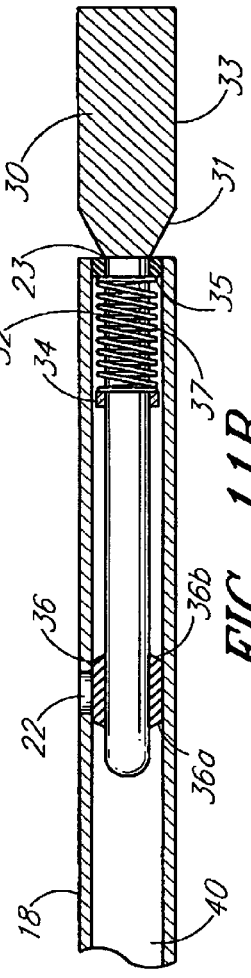

FIG. 11B

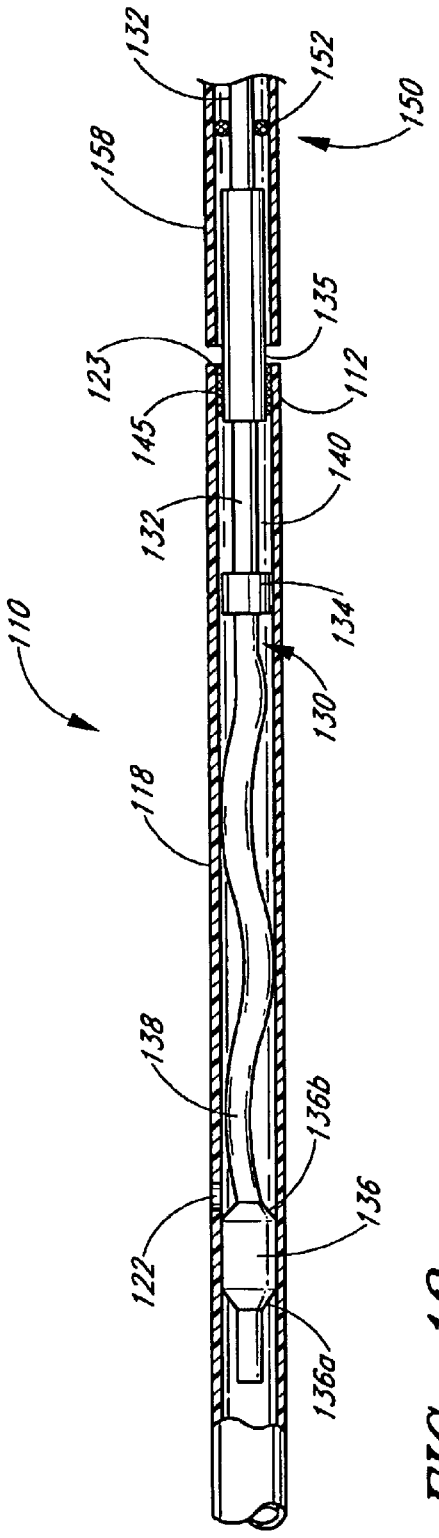
110
132
152
150
158
135
123
112
145
140
132
134
130
118
138
136b
136
122
136a

FIG. 12

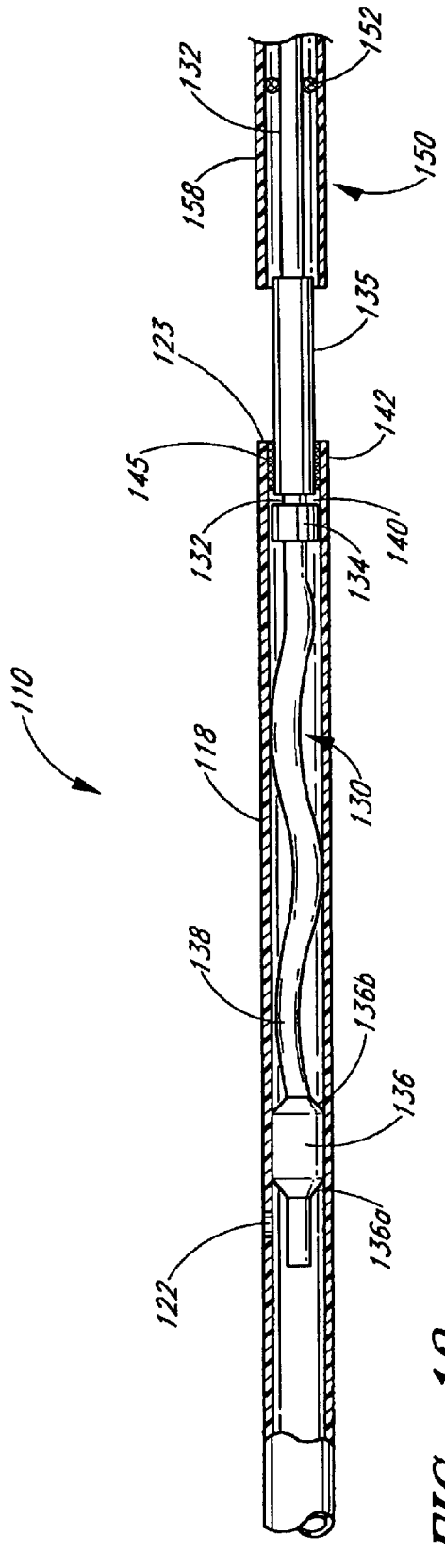
110
132
152
150
158
135
123
142
145
132
134
140
130
118
138
136b
136
122
136a

FIG. 13

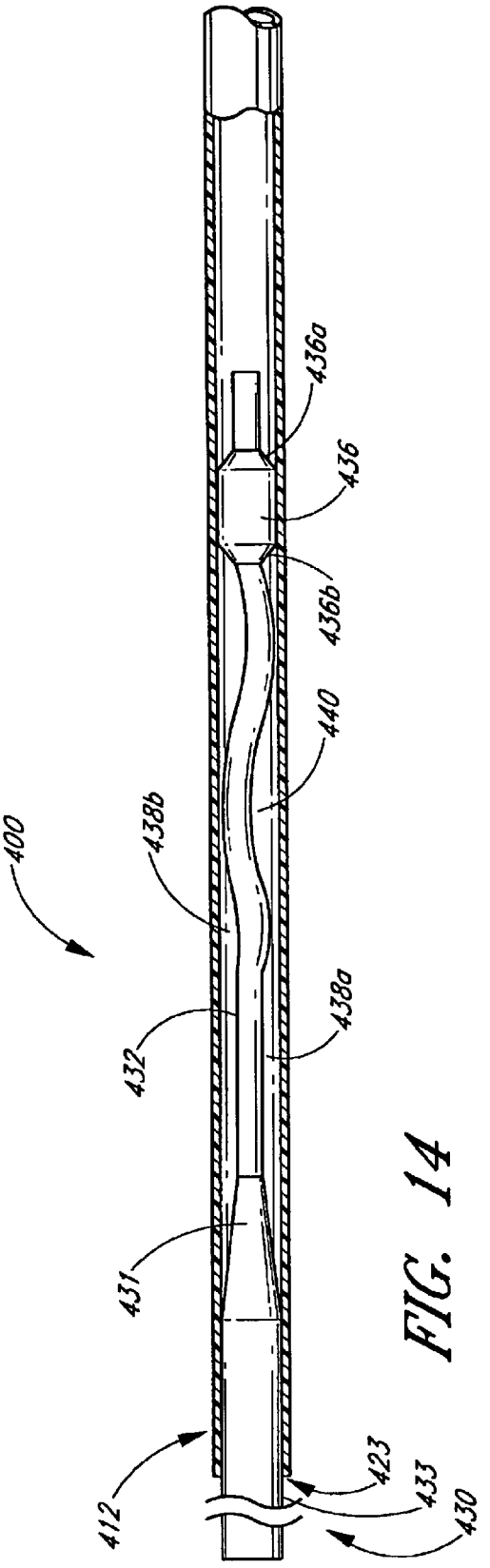
400
438b
436a
436
436b
440
438a
432
431
412
423
433
430

FIG. 14

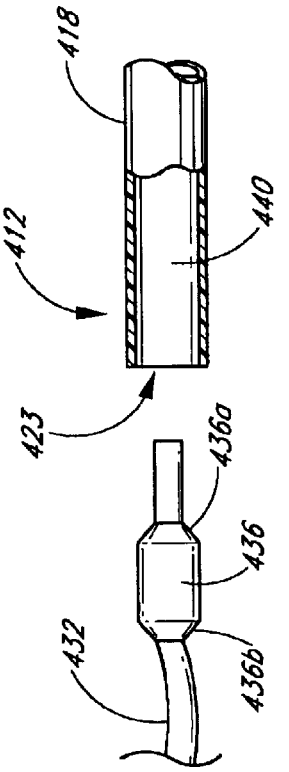
418
412
440
423
436a
436
432
436b

FIG. 15

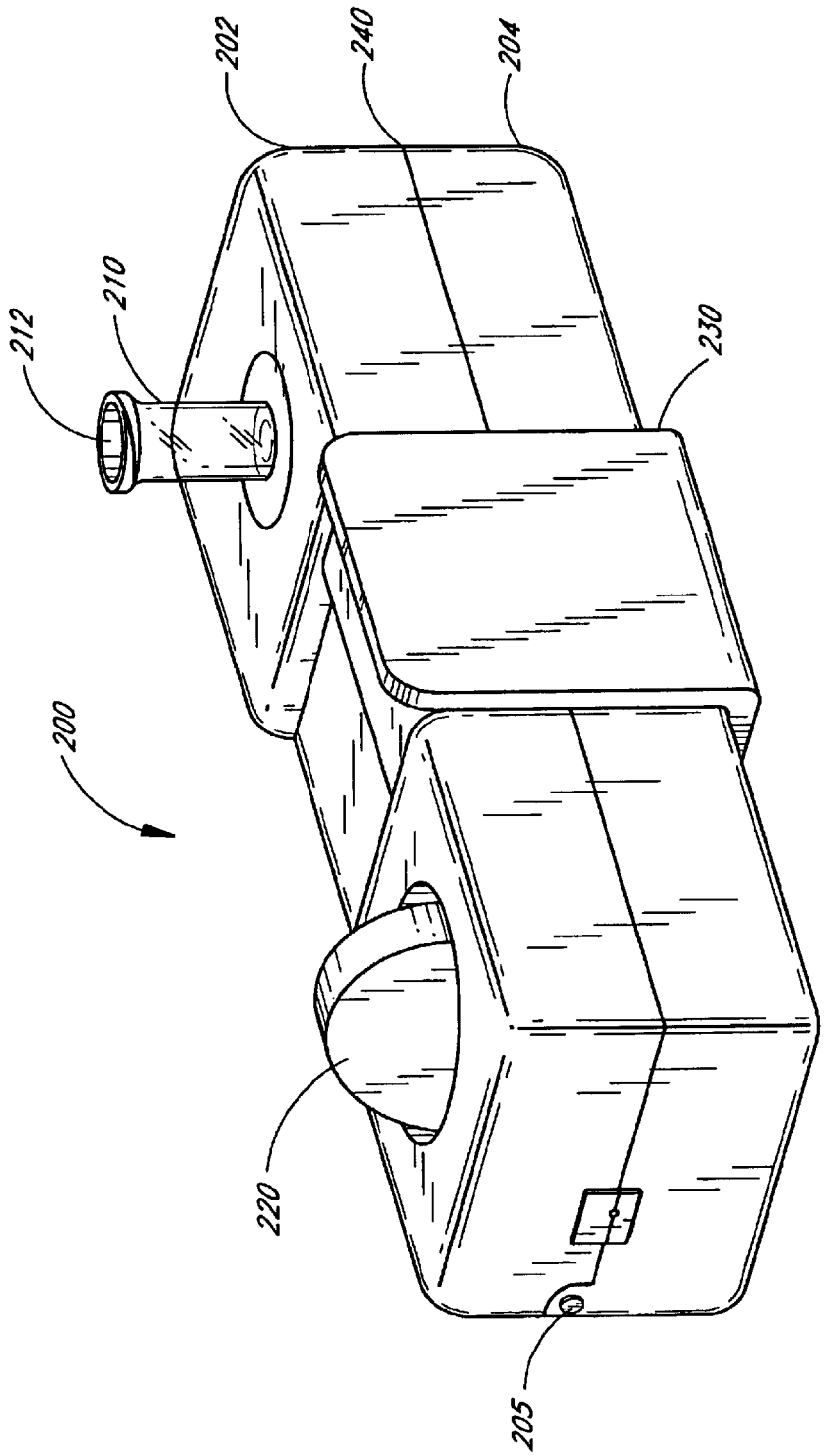

FIG. 16

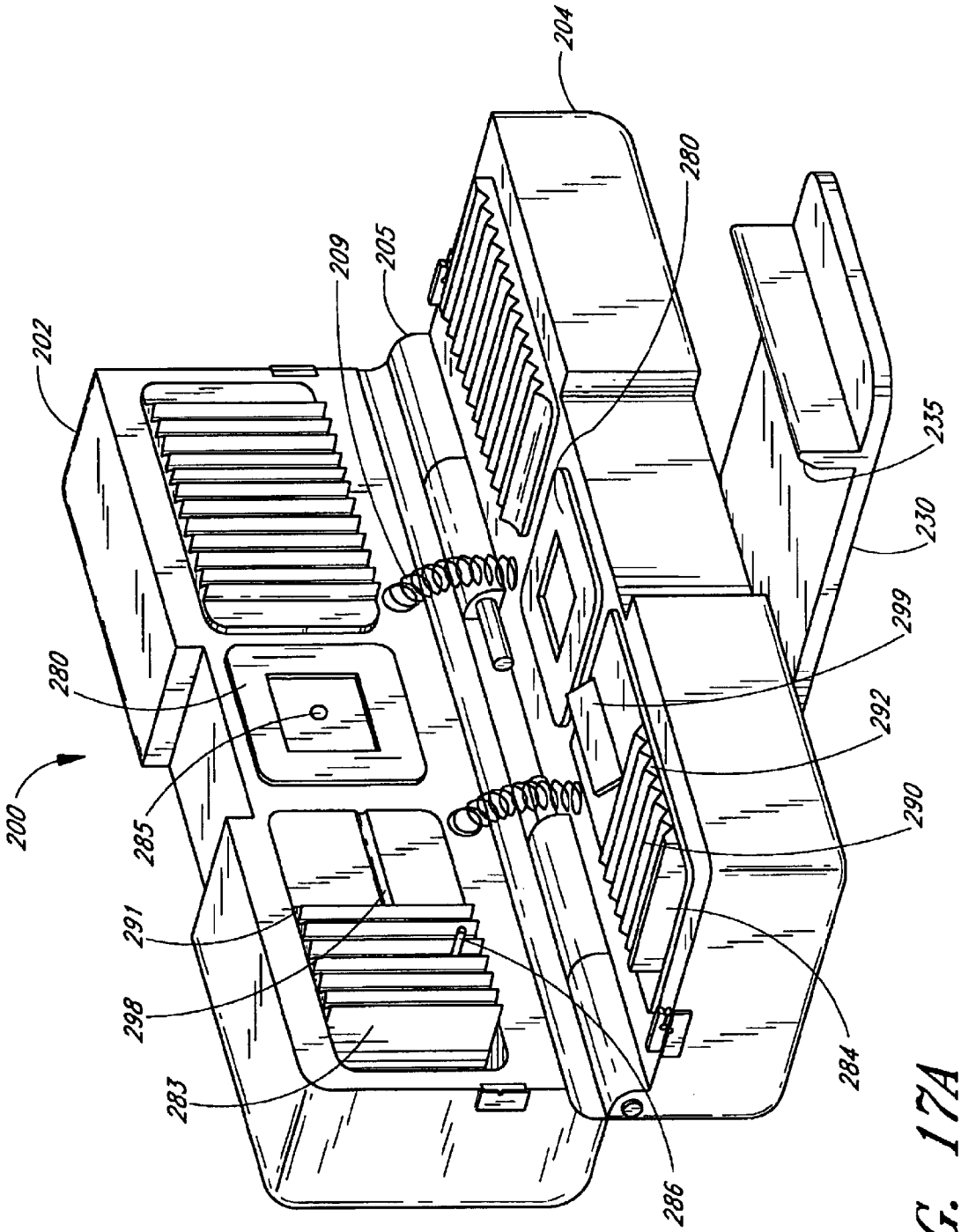
204
280
209
205
202
235
230
299
280
292
200
285
290
291
298
284
283
286

FIG. 17A

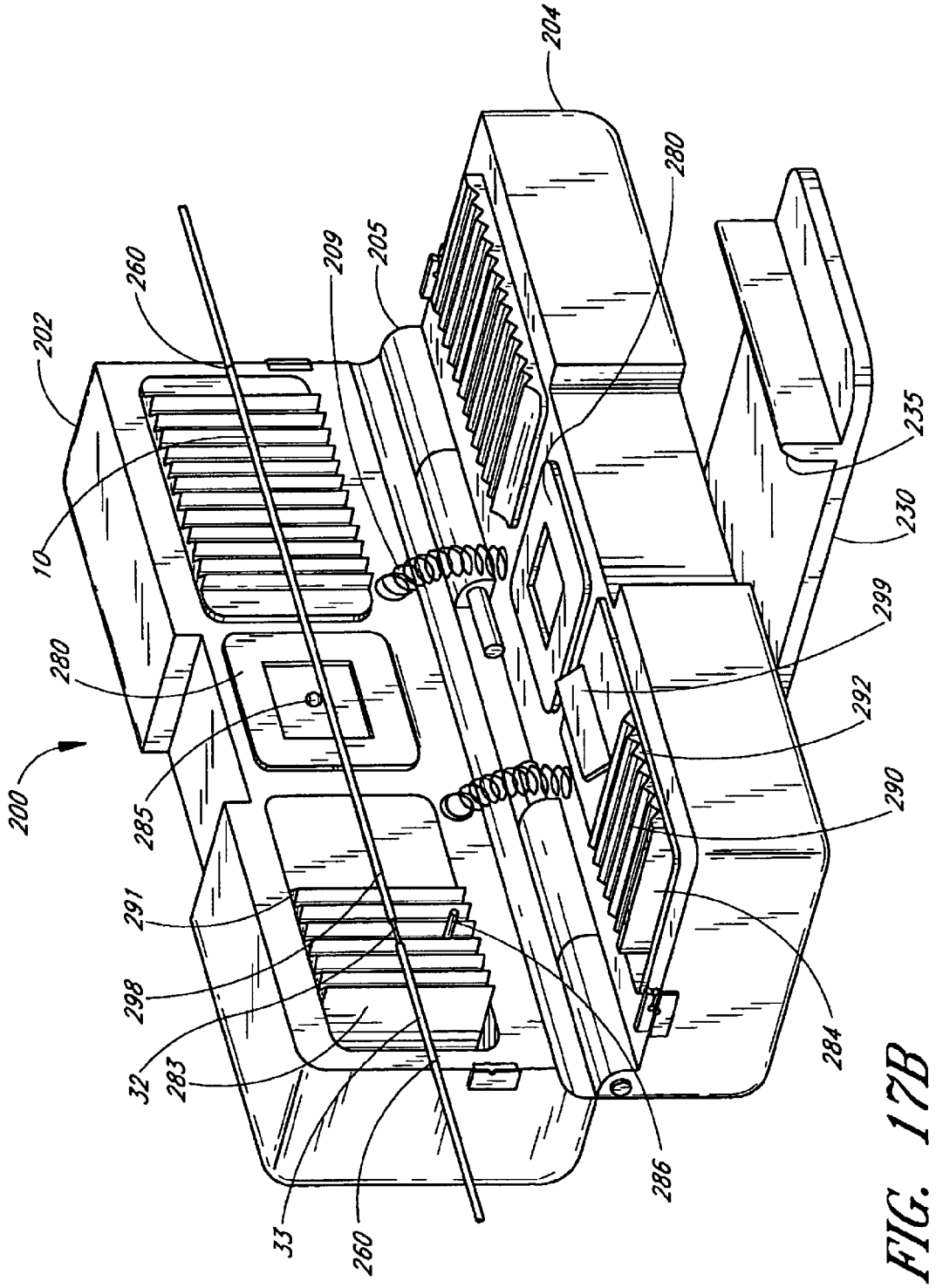
204
280
260
209
205
202
235
10
230
299
280
292
200
290
285
291
298
284
32
283
286
33
260

FIG. 17B

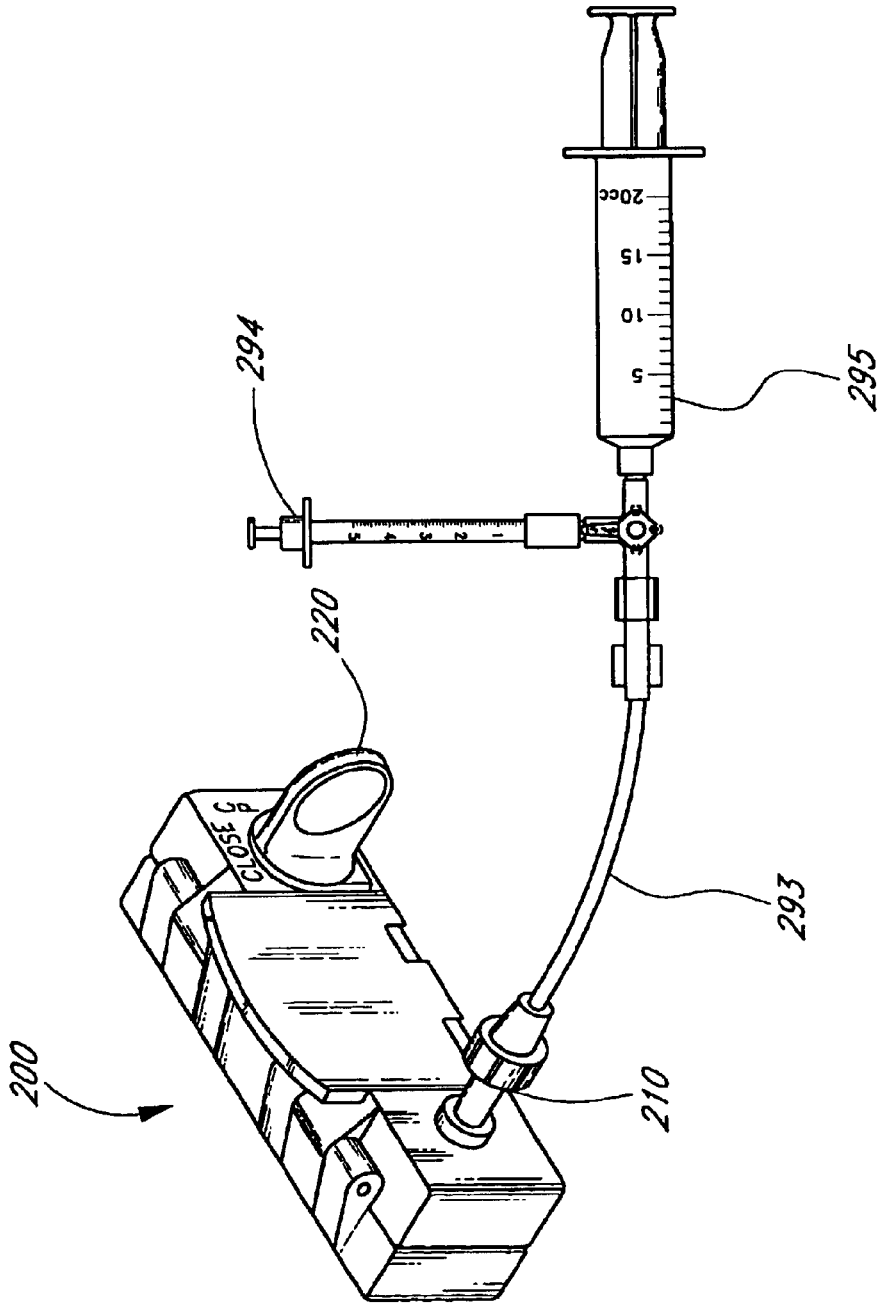

FIG. 17C

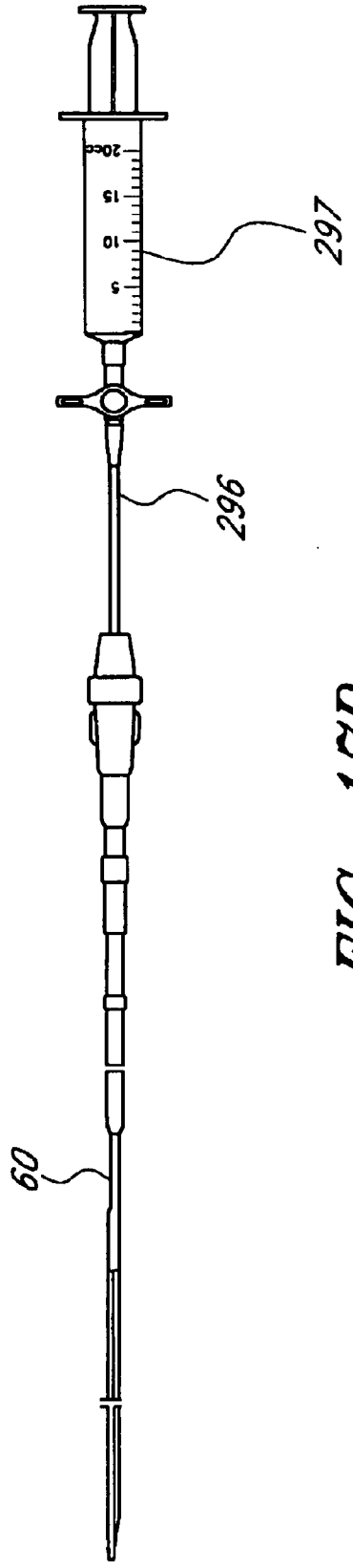

FIG. 17D

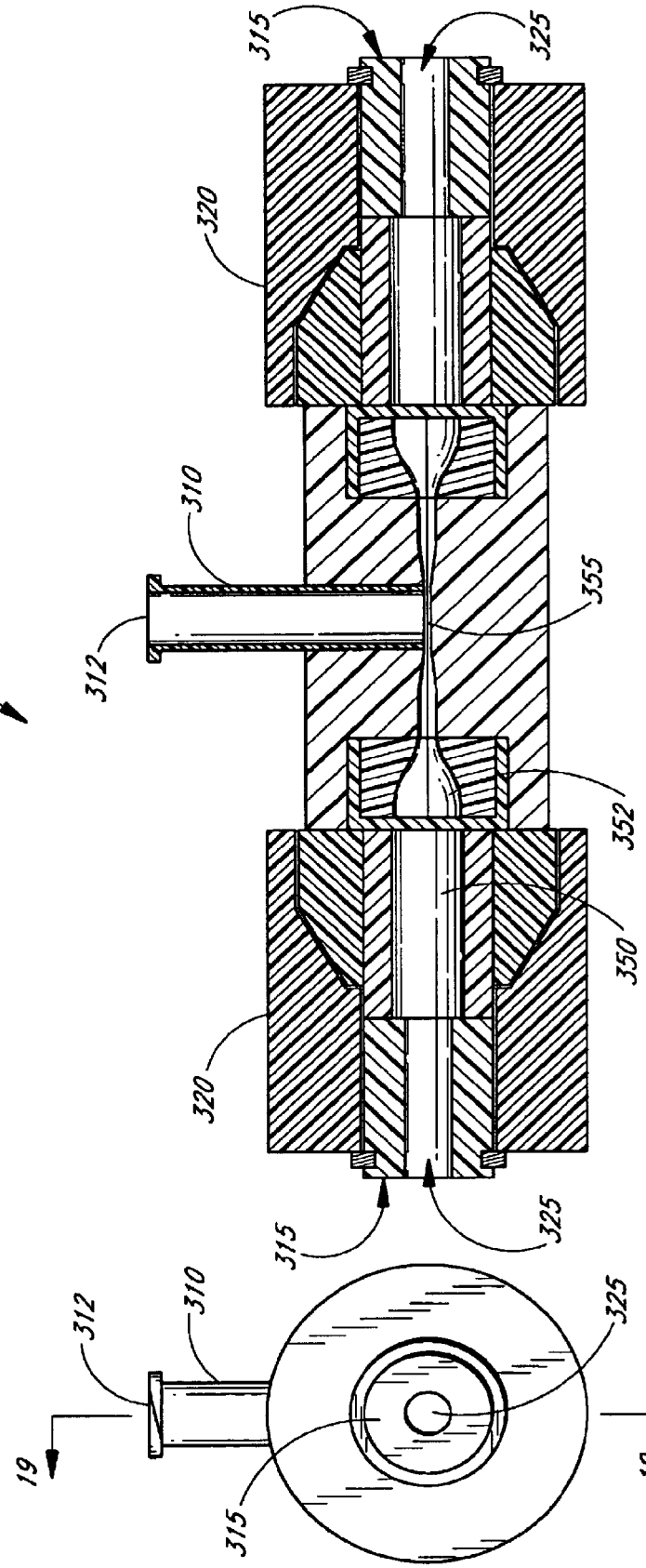
315
325
320
310
300
312
355
352
350
320
315
325
310
312
325
315
19
19

FIG. 19

FIG. 18

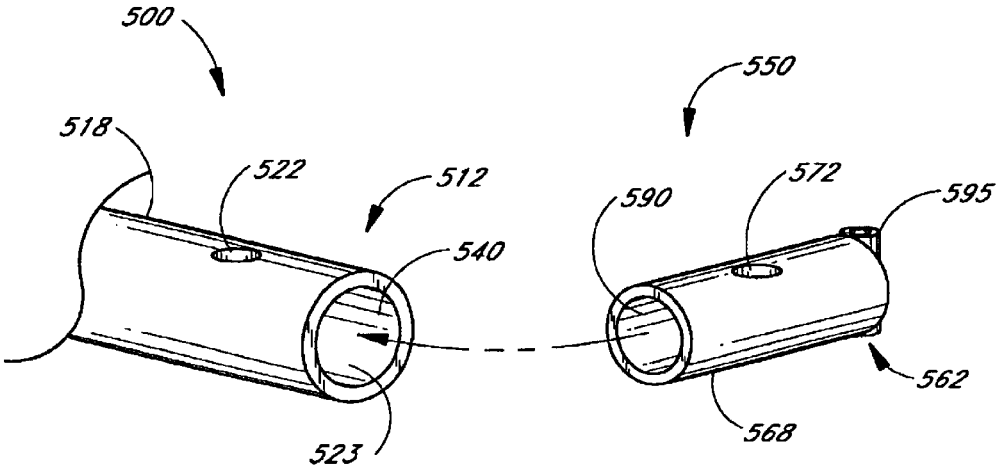
500
550
518
522
512
590
572
595
540
562
568
523

FIG. 20

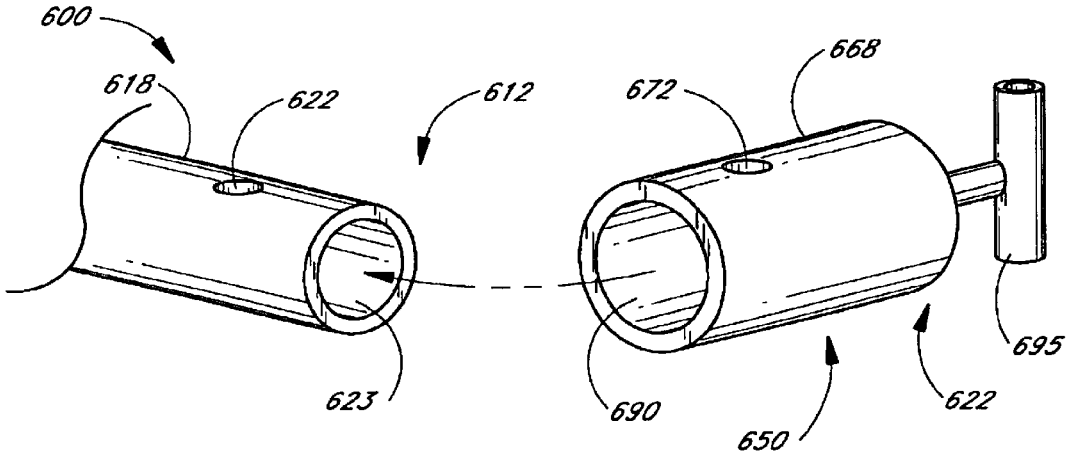
600
618
622
612
672
668
695
623
690
650
622

FIG. 21

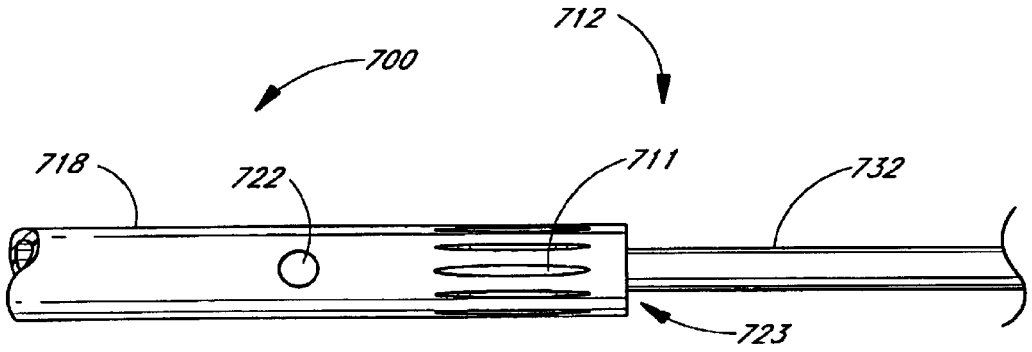

FIG. 22

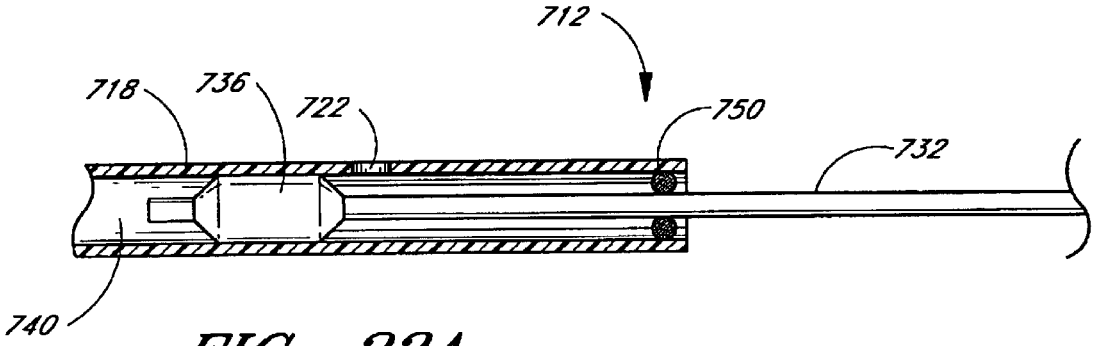

FIG. 23A

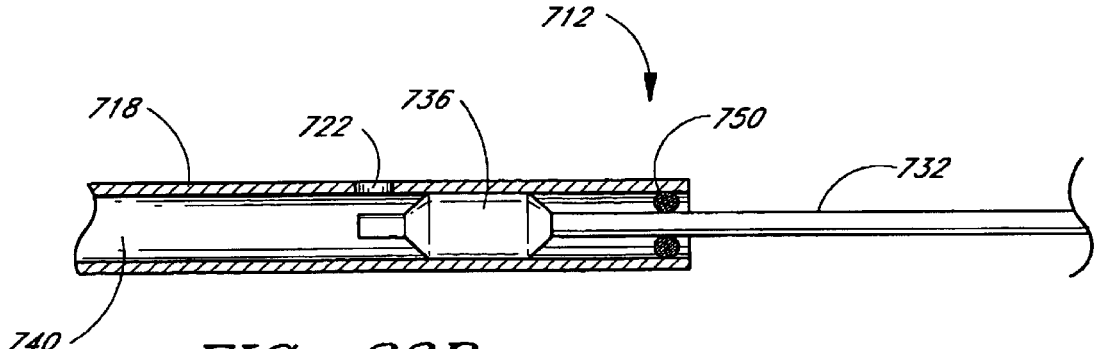

FIG. 23B

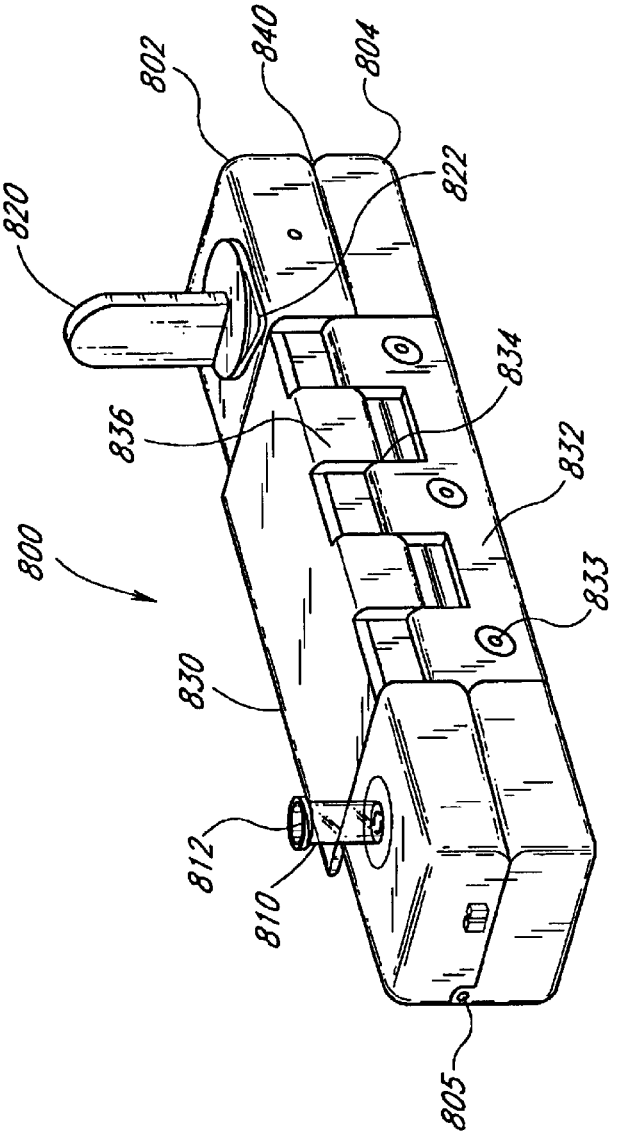

FIG. 24

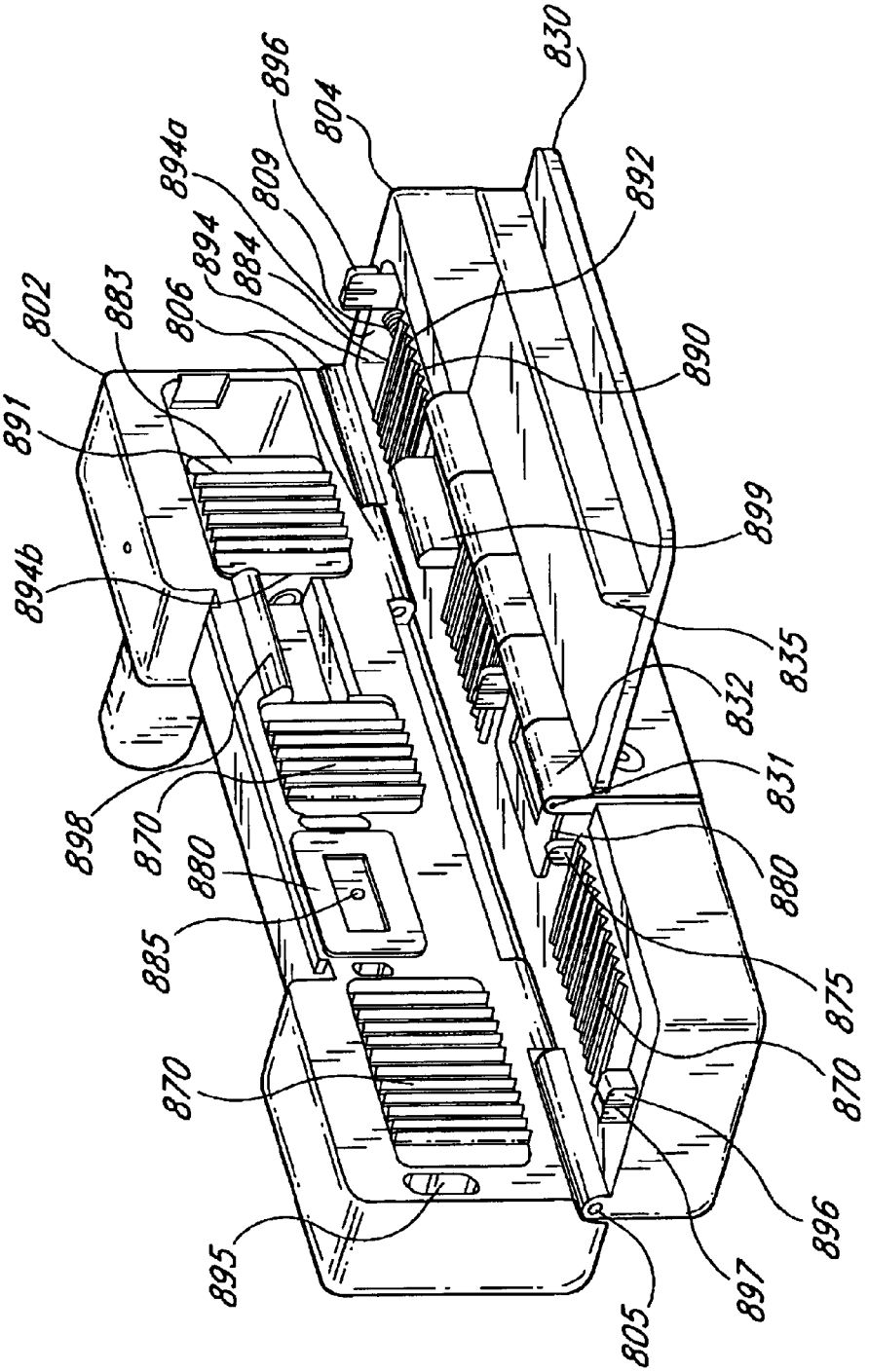
830
896
804
894a
809
892
894
884
802
883
806
890
891
899
894b
835
832
831
898
870
880
880
885
875
870
870
896
895
897
805

FIG. 25

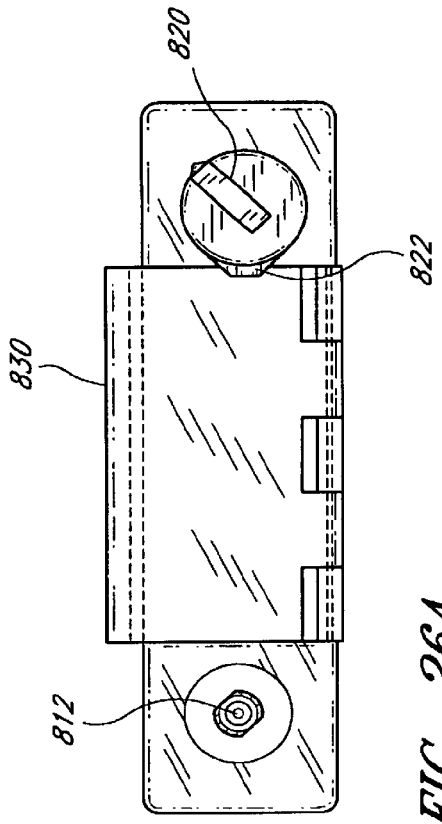

FIG. 26A

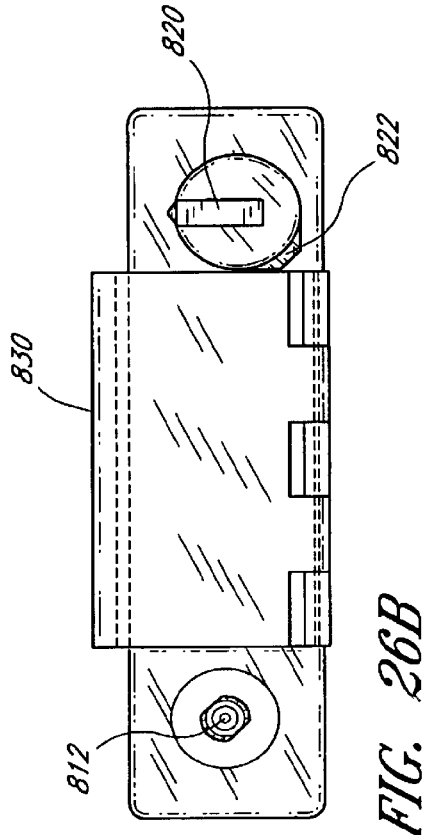

FIG. 26B

FIG. 27A

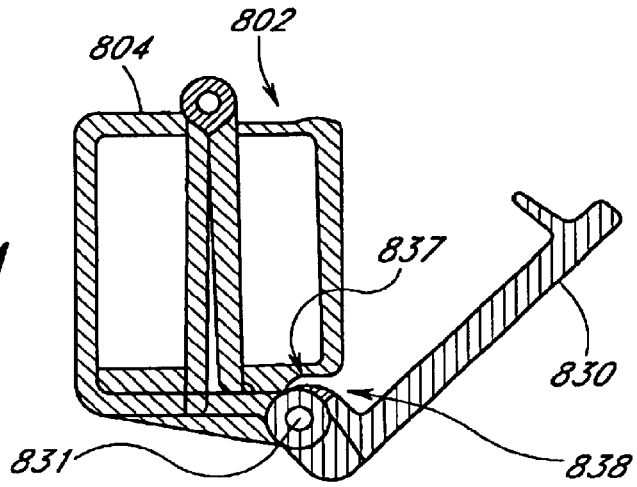

FIG. 27B

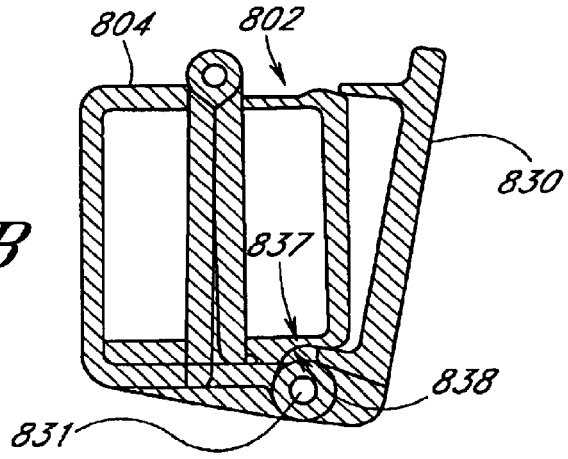

FIG. 27C

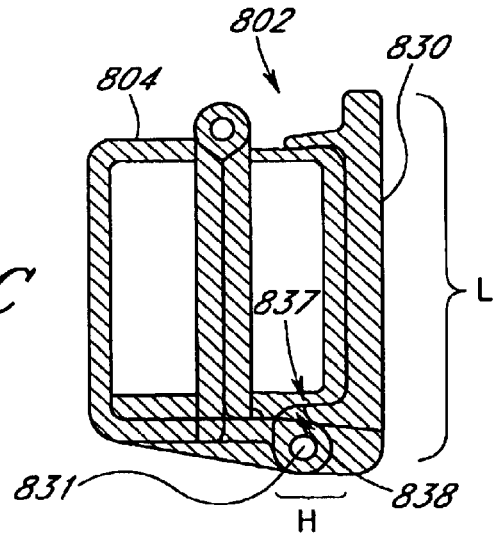

FIG. 28A

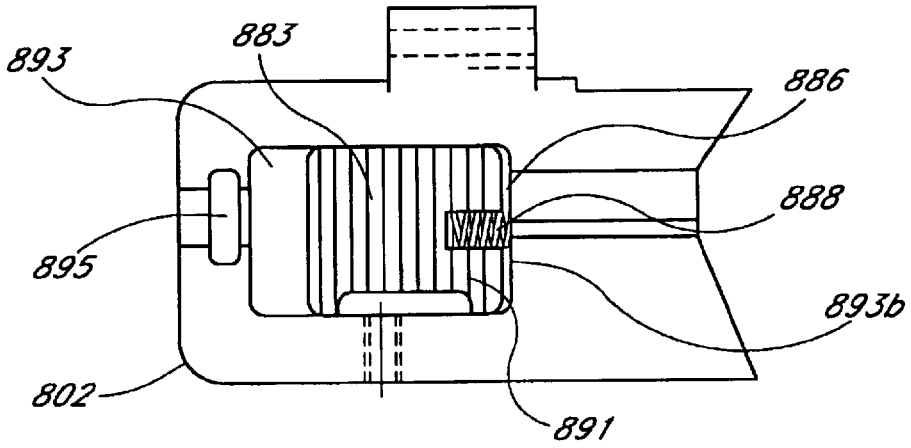

FIG. 28B

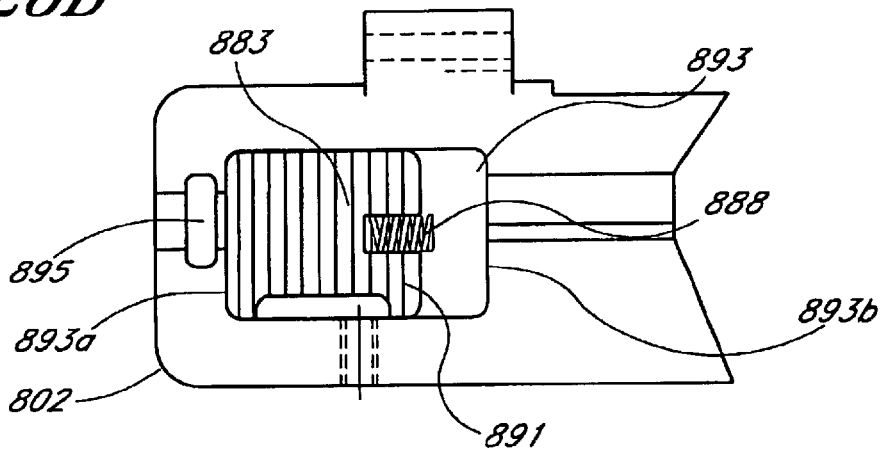

FIG. 28C

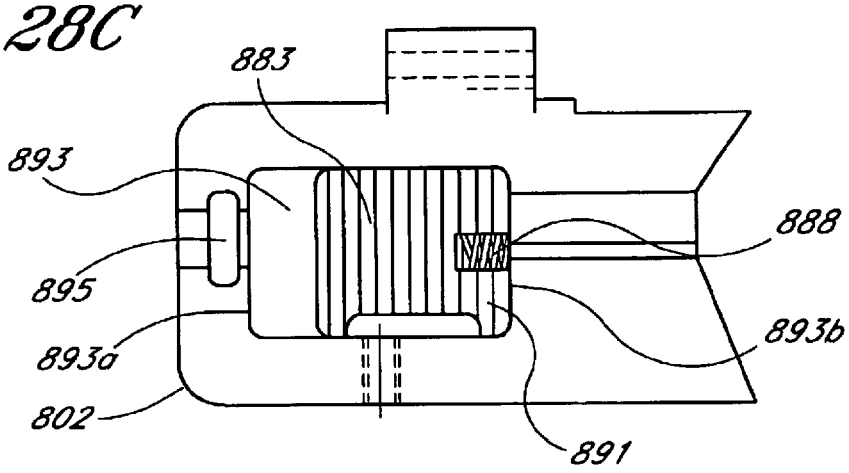

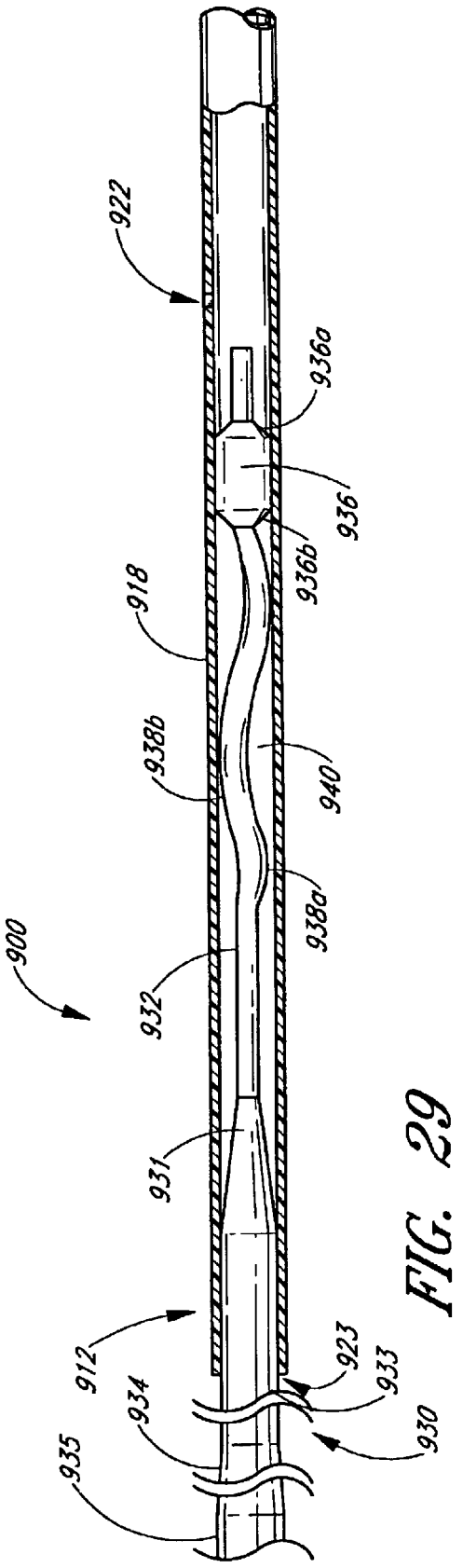
900
912
922
923
930
931
932
933
934
935
936
936a
936b
938a
938b
940

FIG. 29

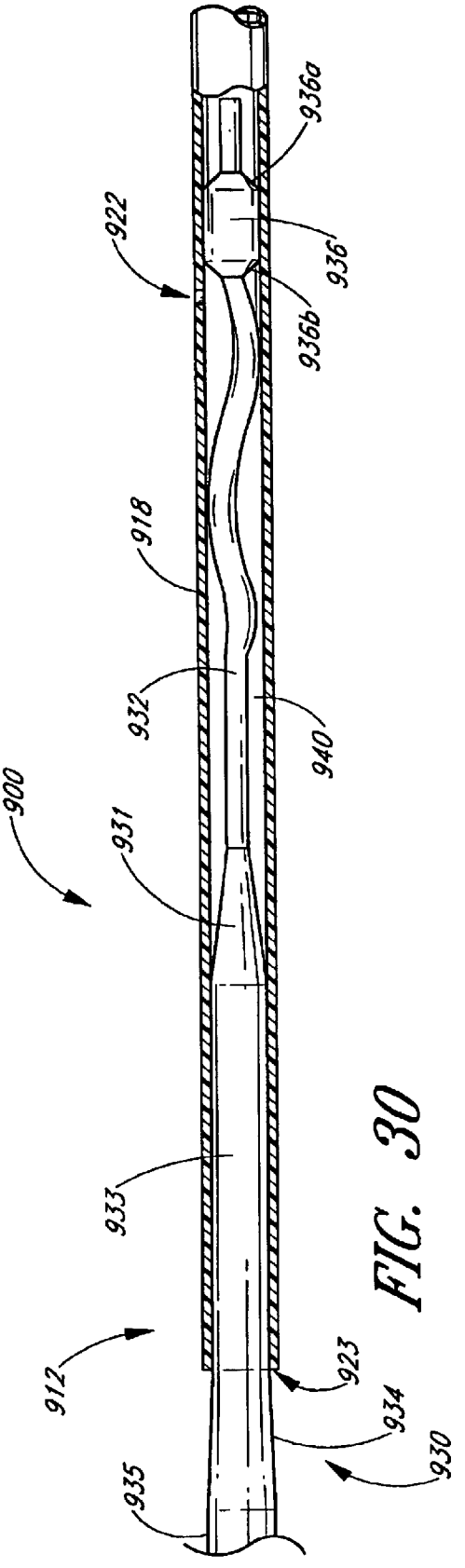
900
912
922
923
930
931
932
933
934
935
936
936a
936b
940

FIG. 30

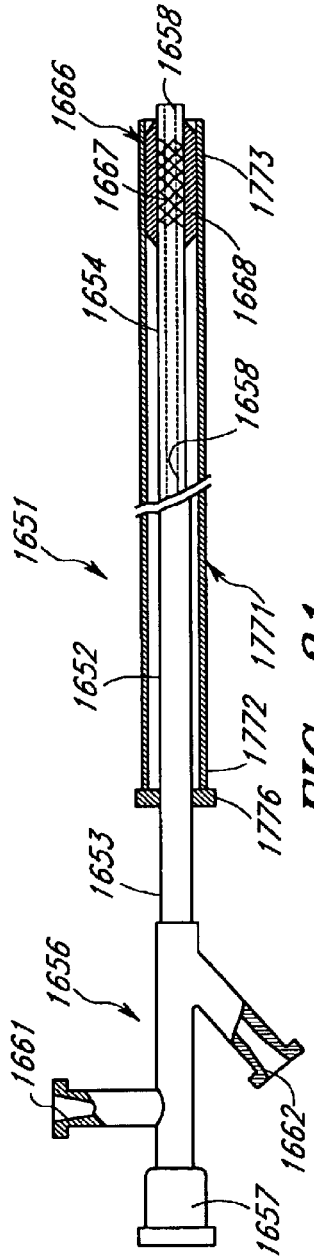

FIG. 31

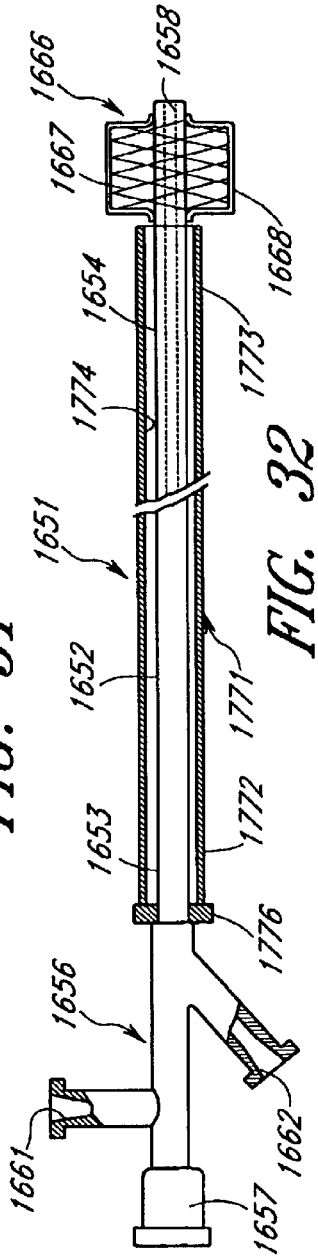

FIG. 32

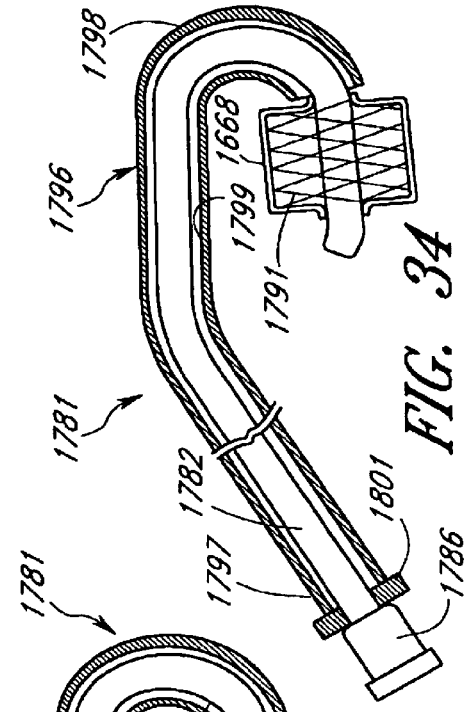

FIG. 34

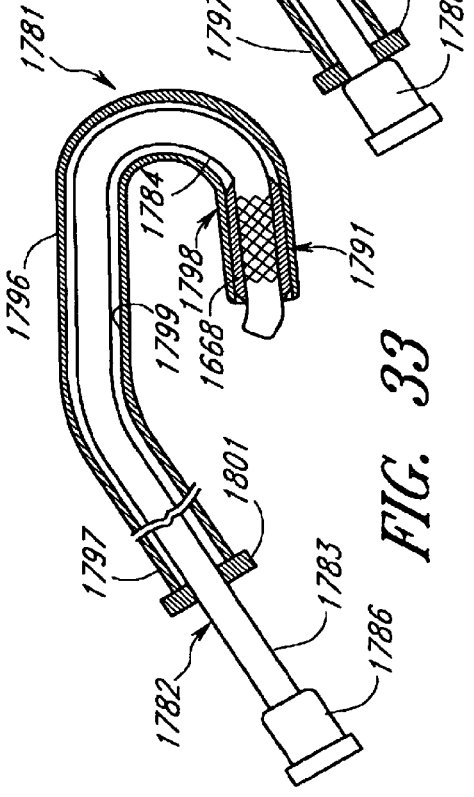

FIG. 33

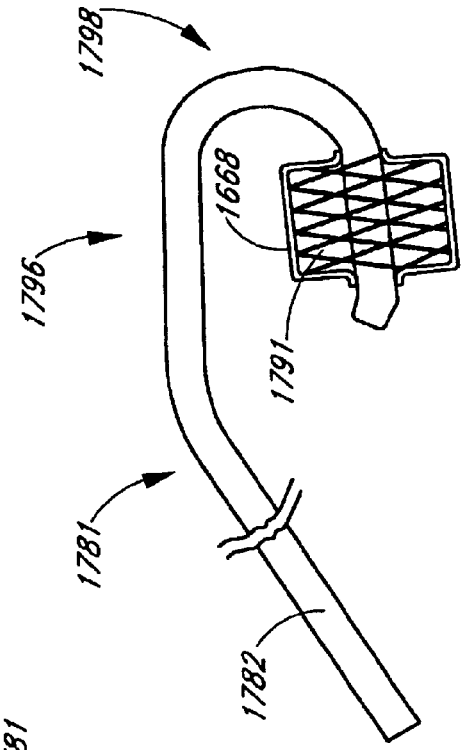
1798
1668
1796
1791
1781
1782

FIG. 36

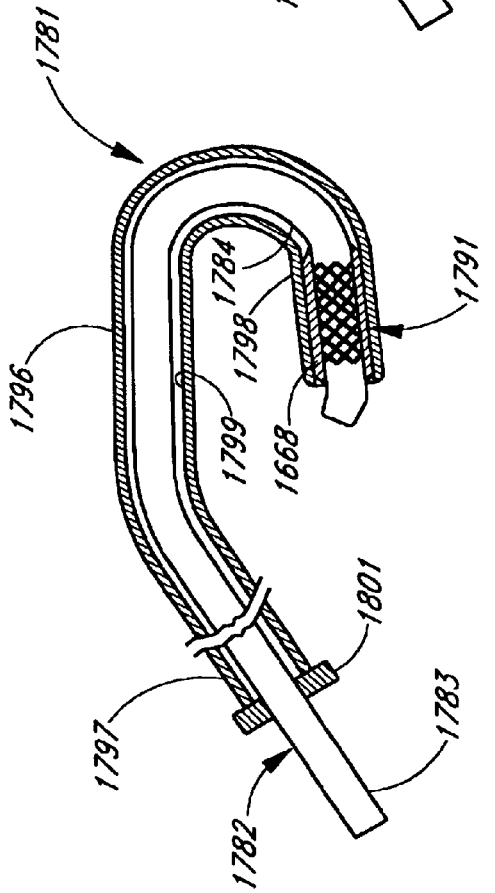
1781
1784
1791
1798
1796
1799
1668
1801
1797
1783
1782

FIG. 35

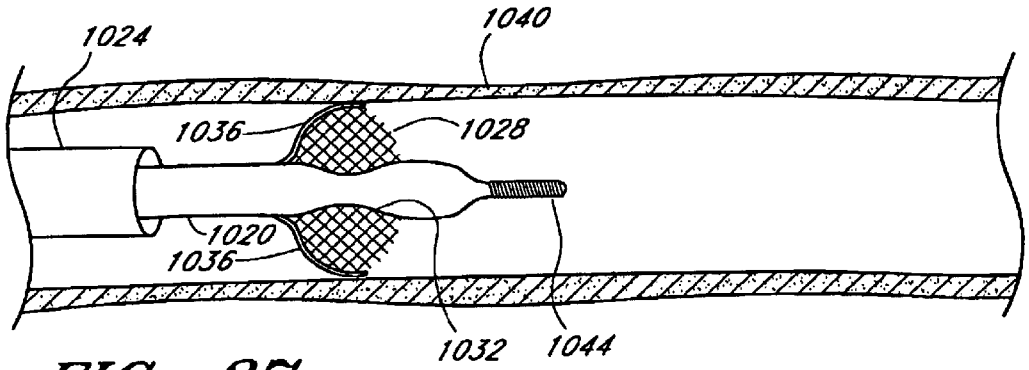

FIG. 37

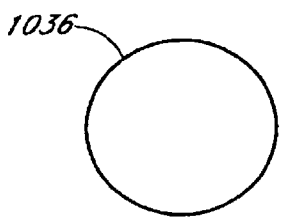

FIG. 38A

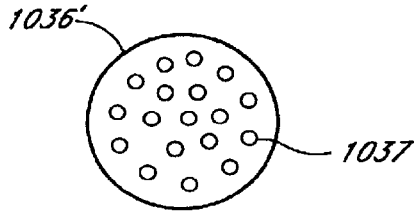

FIG. 38B

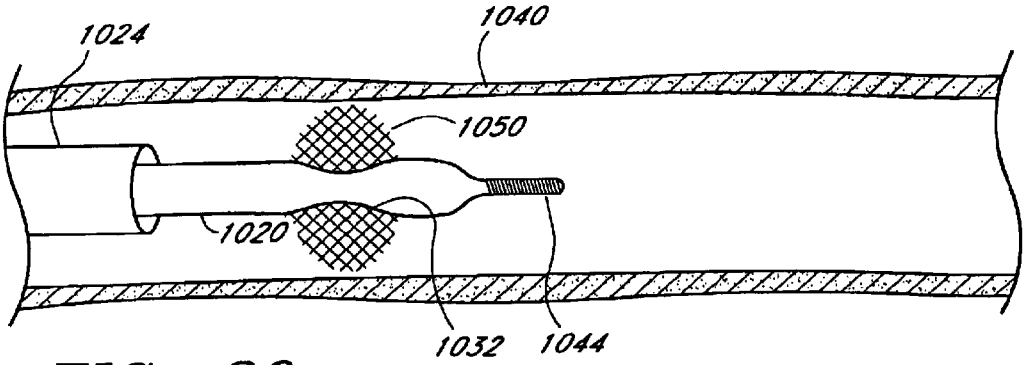

FIG. 39

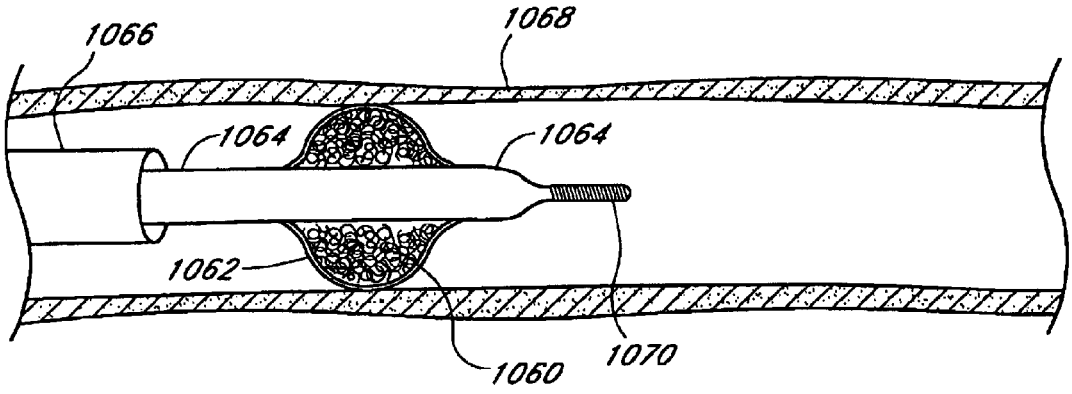

FIG. 40

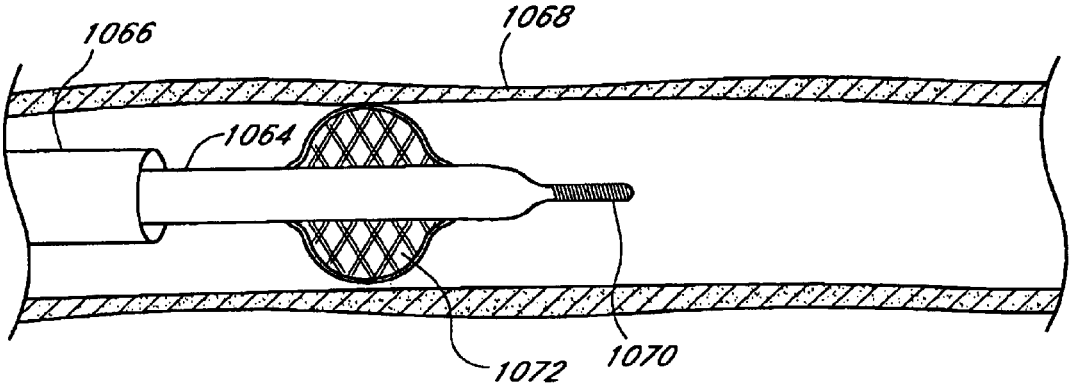

FIG. 41

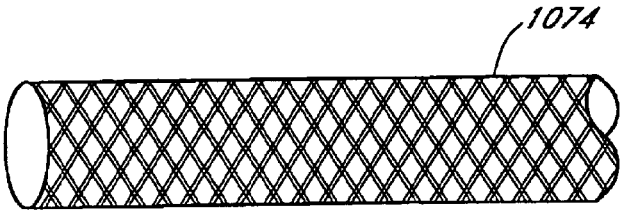

FIG. 42

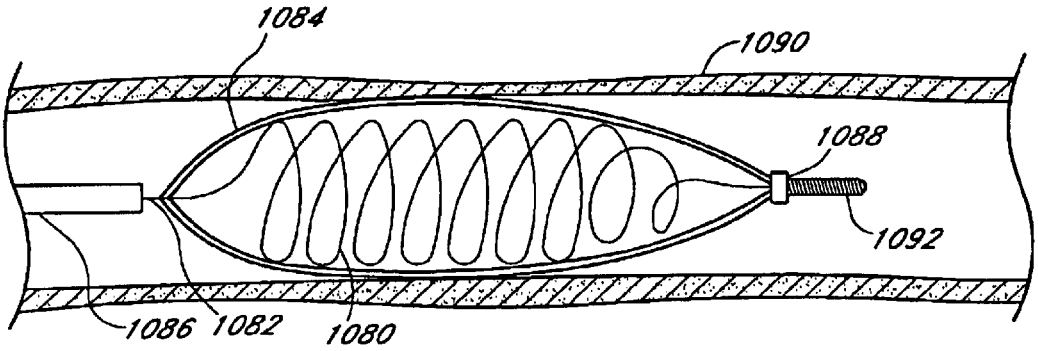

FIG. 43

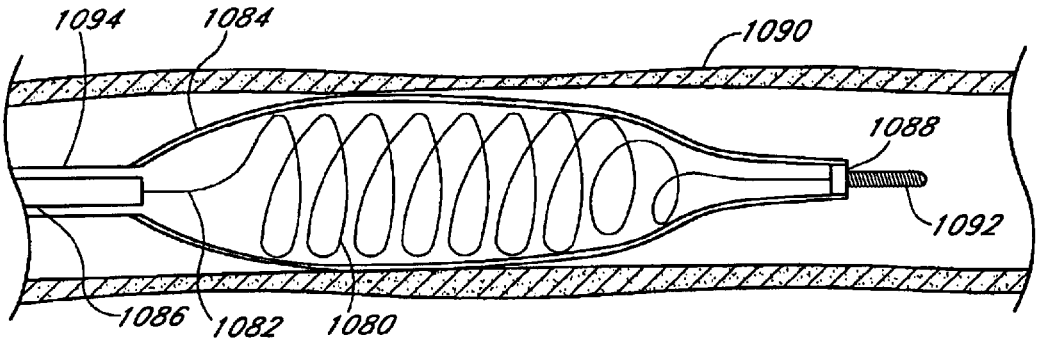

FIG. 44

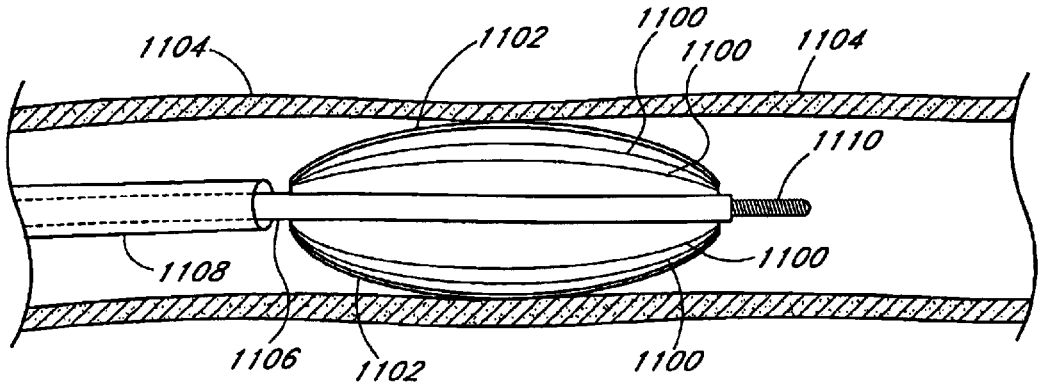

FIG. 45

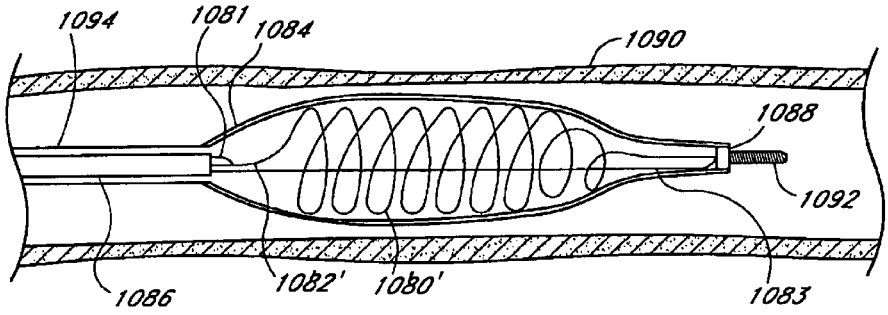

FIG. 44A

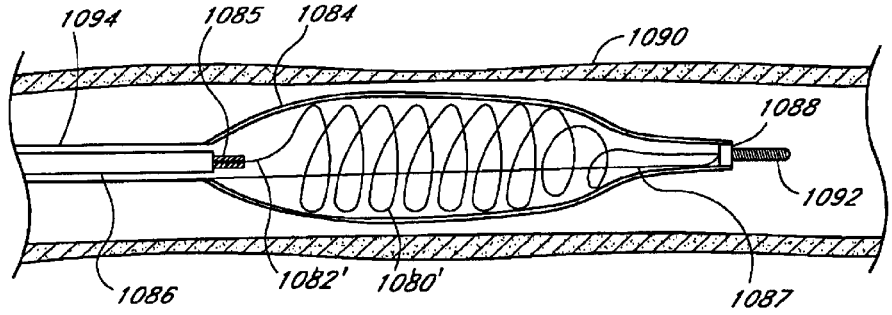

FIG. 44B

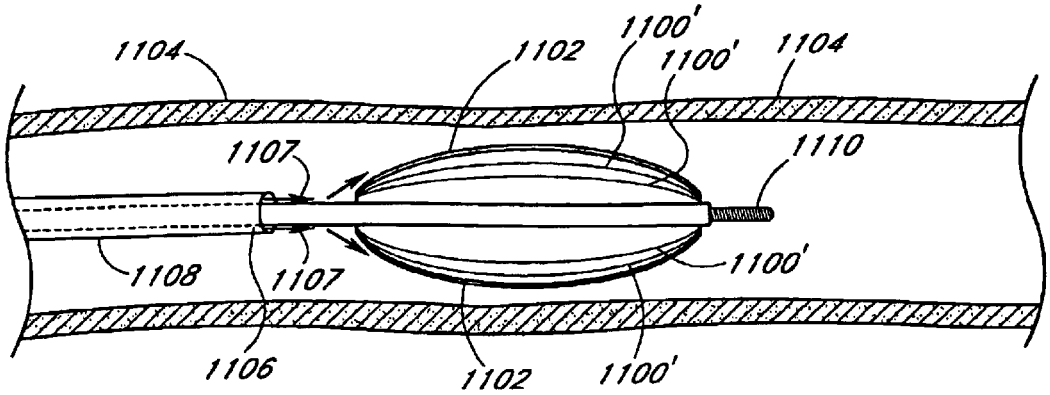

FIG. 45A

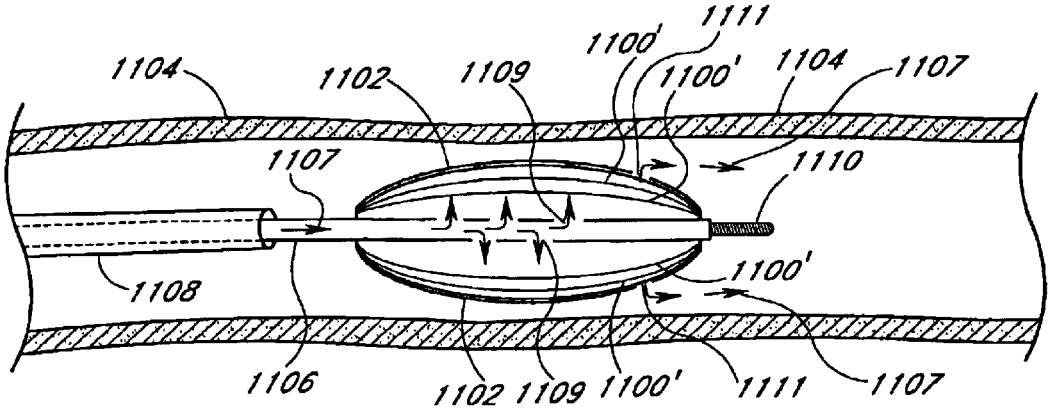

FIG. 45B

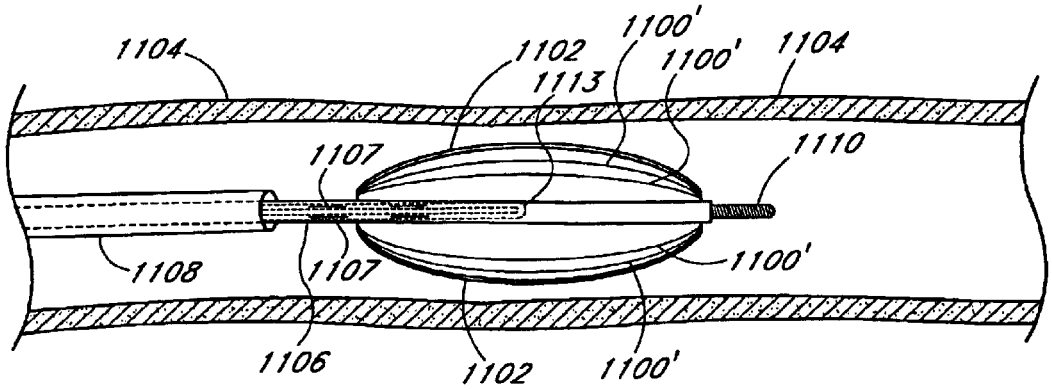

FIG. 45C

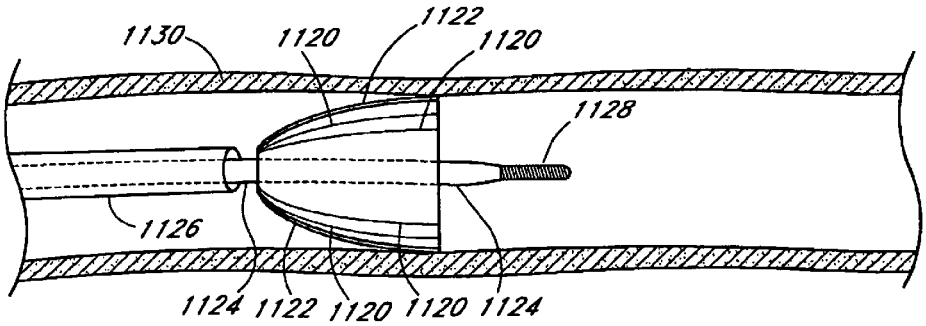
1130
1120
1122
1120
1128
1126
1124
1122
1120
1120
1124

FIG. 46

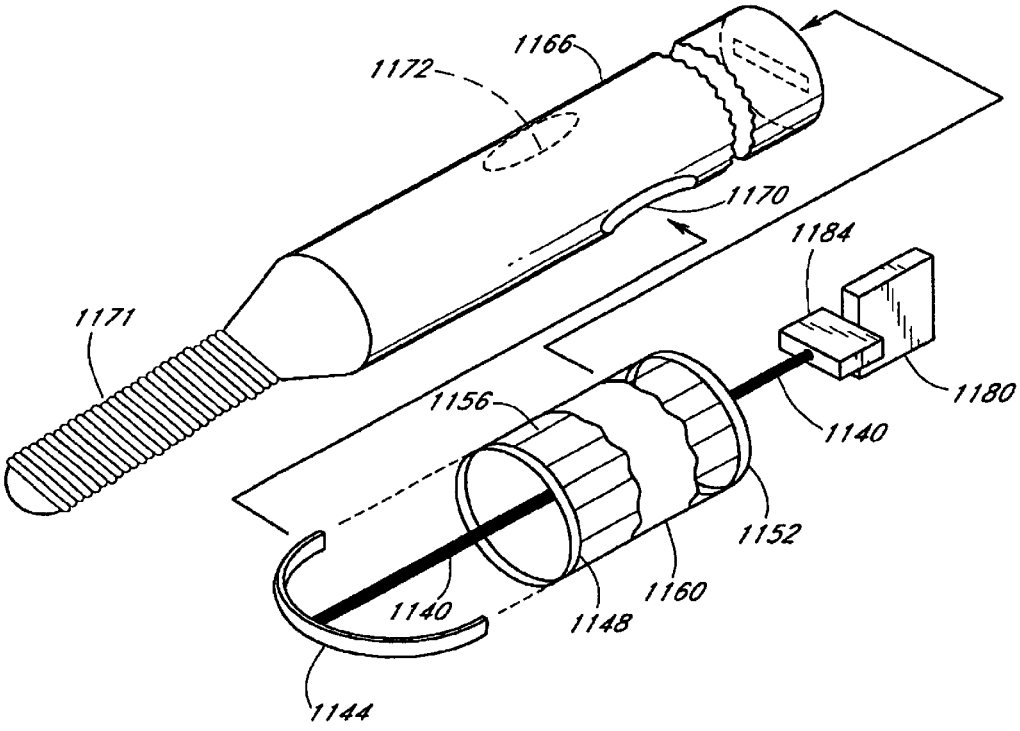
1166
1172
1170
1184
1171
1180
1156
1140
1152
1160
1140
1148
1144

FIG. 47

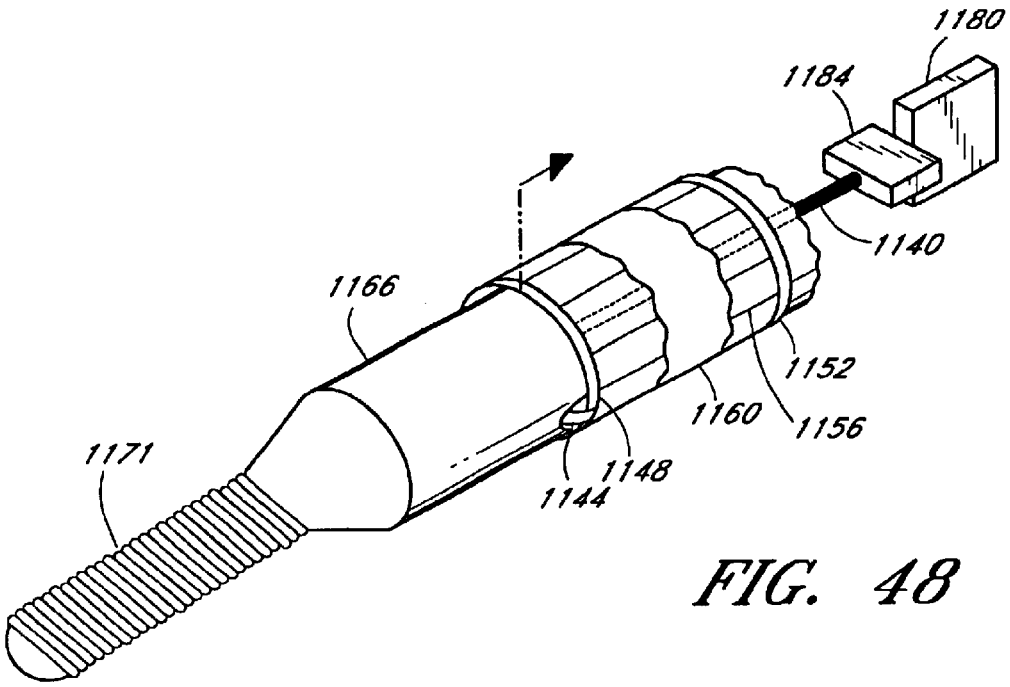
1180
1184
1140
1166
1152
1160
1156
1171
1148
1144

FIG. 48

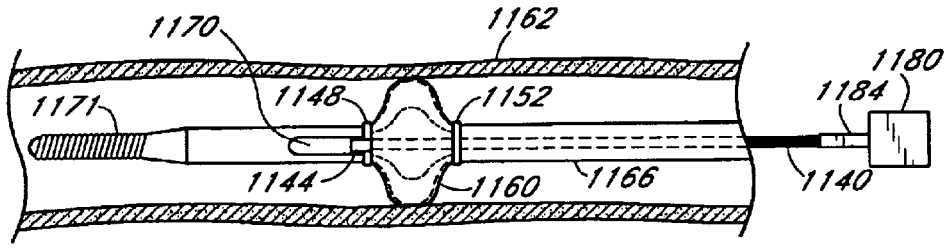
1170
1162
1180
1184
1171
1148
1152
1144
1160
1166
1140

FIG. 49

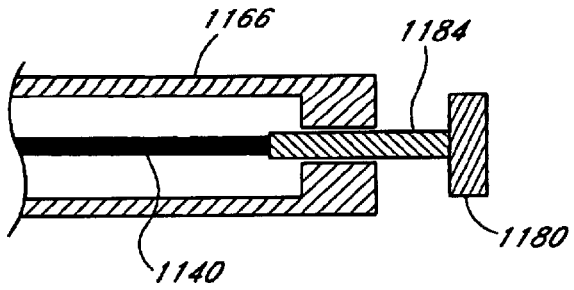

FIG. 50A

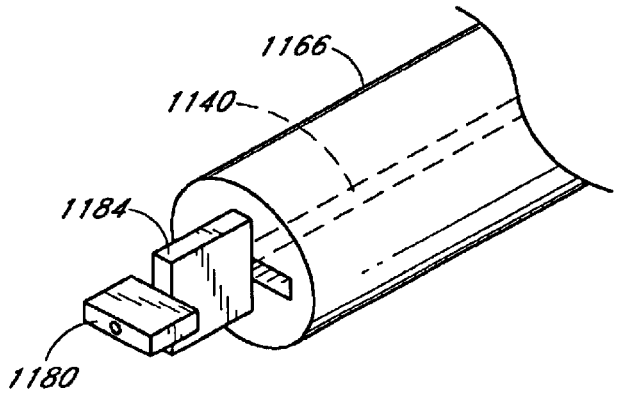

FIG. 50B

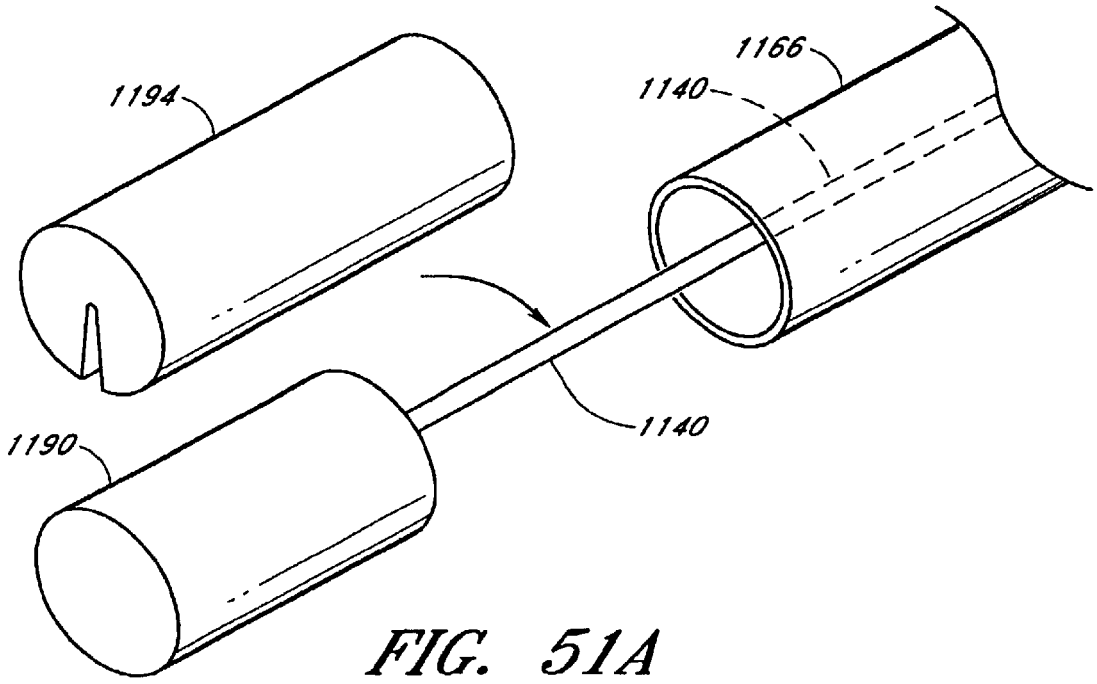

FIG. 51A

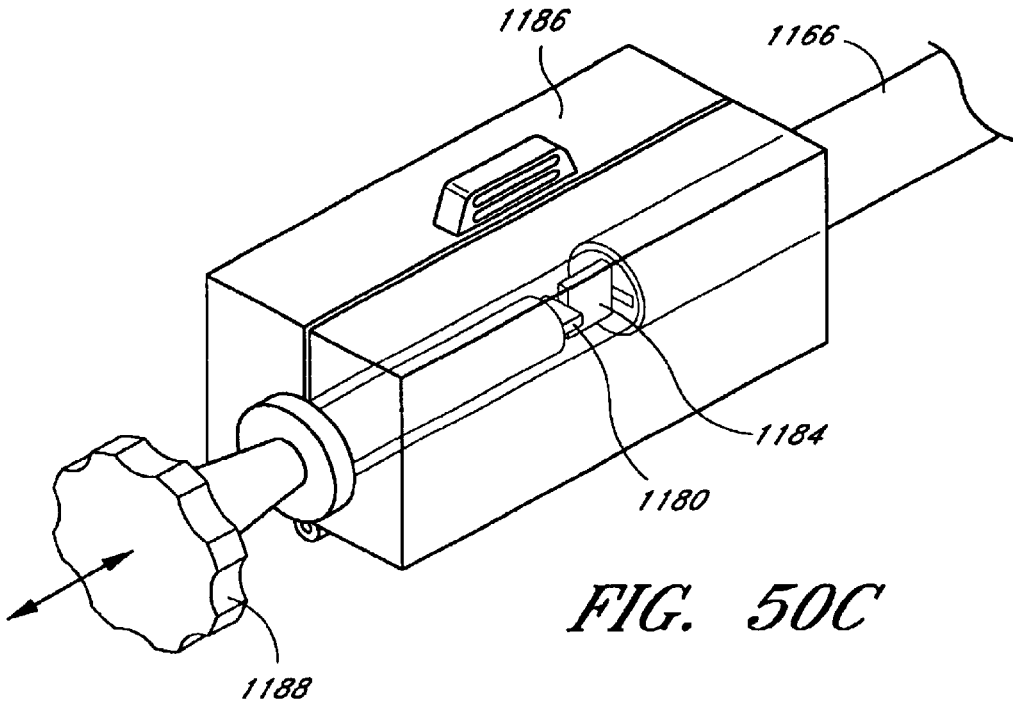

FIG. 50C

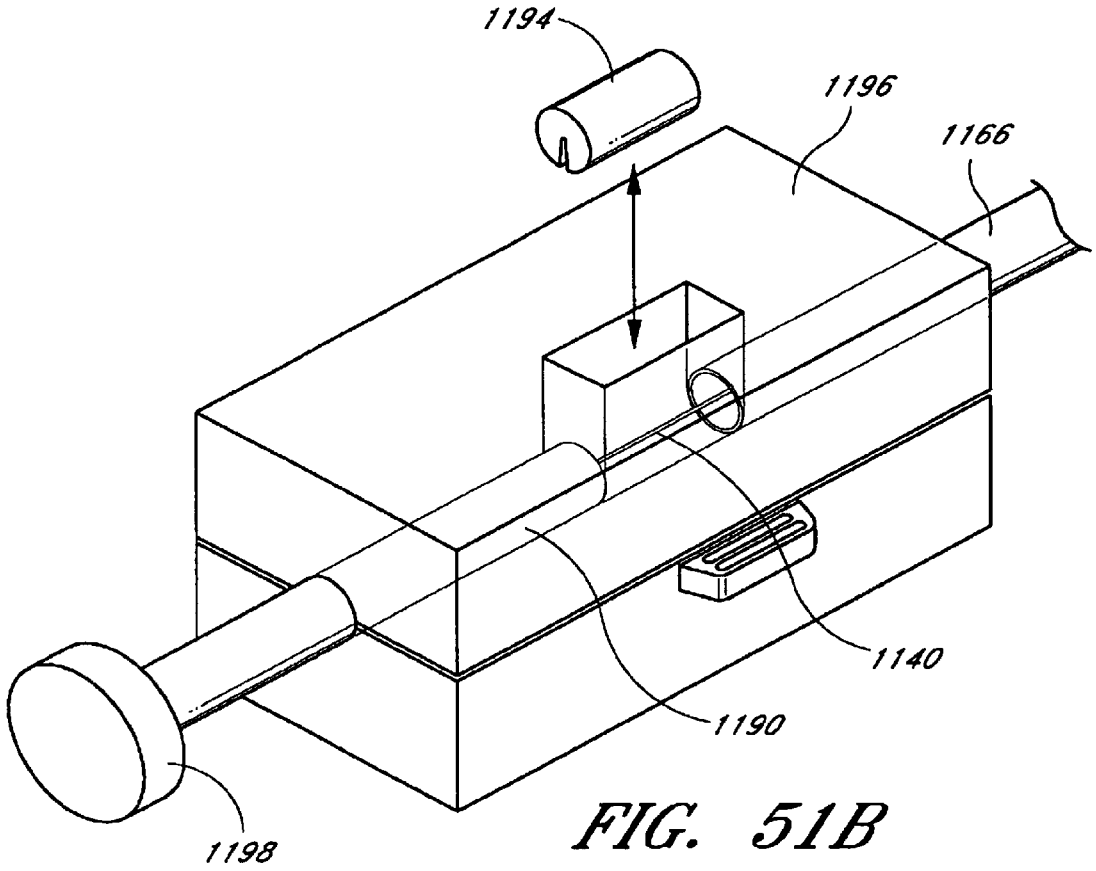

FIG. 51B

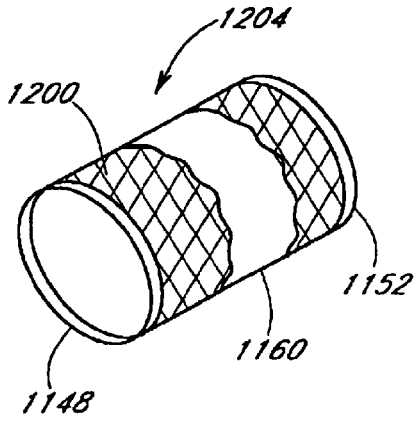

FIG. 52A

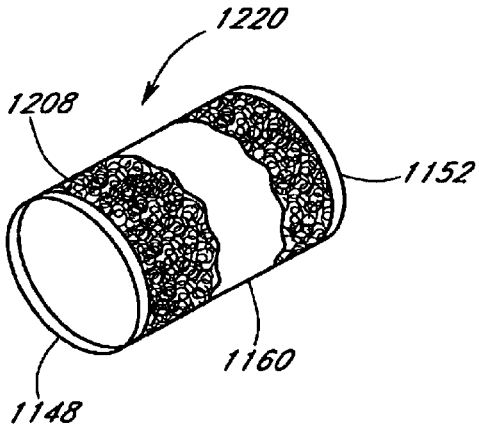

FIG. 52B

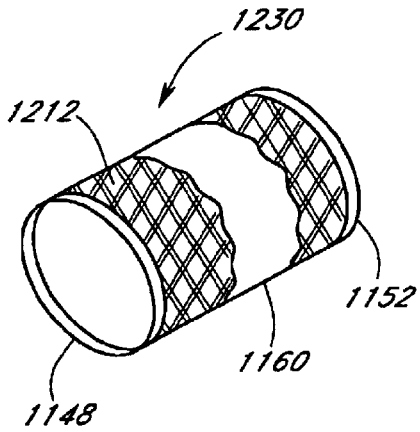

FIG. 52C

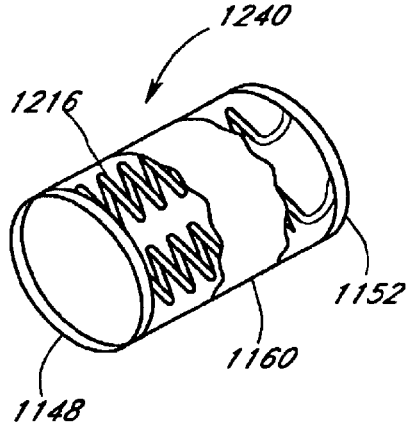

FIG. 52D

EXCHANGE METHOD FOR EMBOLI CONTAINMENT

RELATED APPLICATIONS

This application is a continuation of application Ser. No. 09/049,712, entitled EXCHANGE METHOD FOR EMBOLI CONTAINMENT, filed Mar. 27, 1998, now U.S. Pat. No. 6,544,276, which is a continuation-in-part of application Ser. No. 08/975,723 entitled LOW PROFILE CATHETER VALVE AND INFLATION ADAPTER, filed Nov. 20, 1997, now U.S. Pat. No. 6,050,972, the entirety of which is hereby incorporated by reference. U.S. Pat. No. 6,050,972 is a continuation-in-part of application Ser. No. 08/812,139, filed Mar. 6, 1997, abandoned, which is a continuation-in-part of application Ser. No. 08/650,464, filed May 20, 1996, abandoned. Application Ser. No. 09/049,712, is also a continuation-in-part of application Ser. No. 09/026,106, entitled OCCLUSION OF A VESSEL, filed Feb. 19, 1998, now U.S. Pat. No. 6,312,407, which is also a continuation-in-part of application Ser. No. 08/650,464, filed May 20, 1996, abandoned.

BACKGROUND OF THE INVENTION

1. Field of the Invention

The present invention relates to medical catheters used in treating saphenous vein grafts, coronary arteries, and other blood vessels, and more particularly, to a method for exchanging catheters during emboli containment in such vessels.

2. Description of the Related Art

Guidewires are conventionally used to guide the insertion of various medical instruments, such as catheters, to a desired treatment location within a patient's vasculature. In a typical procedure, the clinician forms an access point for the guidewire by creating an opening in a peripheral blood vessel, such as the femoral artery. The highly flexible guidewire is then introduced through the opening into the peripheral blood vessel, and is then advanced by the clinician through the patient's blood vessels until the guidewire extends across the vessel segment to be treated. Various treatment catheters, such as a balloon dilatation catheter for a percutaneous transluminal coronary angioplasty, may then be inserted over the guidewire and similarly advanced through vasculature until they reach the treatment site.

In certain treatment procedures, it is desirable to successively introduce and then remove a number of different treatment catheters over a guidewire that has been placed in a particular location. In other words, one treatment catheter is "exchanged" for another over a single guidewire. Such an exchange typically involves withdrawing the treatment catheter over the guidewire until the treatment catheter is fully removed from the patient and the portion of the guidewire which extends from the patient. The guidewire is then available to act as a guide for a different treatment catheter.

As can be readily appreciated, the withdrawal of treatment catheters over a placed guidewire may result in the guidewire being displaced from its position. To overcome this difficulty, the prior art has developed "anchorable" guidewires, which generally feature some structure on their distal ends to releasably secure the guidewire at a particular location in the patient for the duration of the medical procedure. One such anchorable guidewire is disclosed in U.S. Pat. No. 5,167,239 to Cohen et al., which discloses a hollow guidewire with an inflation lumen and an expandable balloon on its end. The Cohen device includes a removable

inflation manifold, and a check valve to maintain the balloon in the inflated state when the manifold is removed. The check valve apparatus used by the Cohen device is relatively bulky, and is described as having an outer diameter in its preferred embodiment of 0.0355 inches. Consequently, any treatment catheter intended to be inserted over the Cohen device must have an interior guidewire lumen larger than the outer diameter of the Cohen valve, which for the preferred embodiment, requires an interior lumen with a diameter of more than 0.0355 inches. Cohen also does not address the problem of emboli containment.

As is readily appreciated by those of skill in the art, increasing the interior lumen size of a treatment catheter results in an increase in the outer diameter of the treatment catheter. However, many blood vessels where it is desirable to apply catheter treatment are quite narrow. For example, the left coronary arteries are blood vessels having diameters ranging from 2 to 4 mm, and are susceptible to plaque. Similarly, saphenous vein grafts (SVG) and the carotid arteries are also quite small and susceptible to plaque, and could not practically be treated by larger diameter devices.

Human blood vessels often become occluded or completely blocked by plaque, thrombi, other deposits, emboli or other substances, which reduce the blood carrying capacity of the vessel. Should the blockage occur at a critical place in the circulatory system, serious and permanent injury, or even death, can occur. To prevent this, some form of medical intervention is usually performed when significant occlusion is detected.

Coronary heart disease is an extremely common disorder in developed countries, and is the leading cause of death in the U.S. Damage to or malfunction of the heart is caused by narrowing or blockage of the coronary arteries (atherosclerosis) that supply blood to the heart. The coronary arteries are first narrowed and may eventually be completely blocked by plaque, and may further be complicated by the formation of thrombi (blood clots) on the roughened surfaces of the plaques. Myocardial infarction can result from atherosclerosis, especially from an occlusive or near occlusive thrombi overlying or adjacent to the atherosclerotic plaque, leading to death of portions of the heart muscle. Thrombi and emboli also often result from myocardial infarction, and these clots can block the coronary arteries, or can migrate further downstream, causing additional complications.

Various types of intervention techniques have been developed which facilitate the reduction or removal of the blockage in the blood vessel, allowing increased blood flow through the vessel. One technique for treating stenosis or occlusion of a blood vessel is balloon angioplasty. A balloon catheter is inserted into the narrowed or blocked area, and the balloon is inflated to expand the constricted area. In many cases, near normal blood flow is restored. It can be difficult, however, to treat plaque deposits and thrombi in the coronary arteries, because the coronary arteries are small, which makes accessing them with commonly used catheters difficult.

Other types of intervention include atherectomy, deployment of stents, introduction of specific medication by infusion, and bypass surgery. Each of these methods are not without the risk of embolism caused by the dislodgement of the blocking material which then moves downstream. In addition, the size of the blocked vessel may limit percutaneous access to the vessel.

In coronary bypass surgery, a more costly and invasive form of intervention, a section of a vein, usually the saphe-

nous vein taken from the leg, is used to form a connection between the aorta and the coronary artery distal to the obstruction. Over time, however, the saphenous vein graft may itself become diseased, stenosed, or occluded, similar to the bypassed vessel. Atherosclerotic plaque in saphenous vein grafts tends to be more friable and less fibrocalcific than its counterpart in native coronary arteries.

Diffusely diseased old saphenous vein grafts with friable atherosclerotic lesions and thrombi have therefore been associated with iatrogenic distal embolic debris. Balloon dilatation of saphenous vein grafts is more likely to produce symptomatic embolization than dilatation of the coronary arteries, not only because of the difference in the plaque but also because vein grafts and their atheromatous plaques are generally larger than the coronary arteries to which they are anastomosed. Once the plaque and thrombi are dislodged from the vein, they can move downstream, completely blocking another portion of the coronary artery and causing myocardial infarction. In fact, coronary embolization as a complication of balloon angioplasty of saphenous vein grafts is higher than that in balloon angioplasty of native coronary arteries. Therefore, balloon angioplasty of vein grafts is performed with the realization that involvement by friable atherosclerosis is likely and that atheroembolization represents a significant risk.

Because of these complications and high recurrence rates, old diffusely diseased saphenous vein grafts have been considered contraindications for angioplasty and atherectomy, severely limiting the options for minimally invasive treatment. However, some diffusely diseased or occluded saphenous vein grafts may be associated with acute ischemic syndromes, necessitating some form of intervention.

Furthermore, attempts heretofore have been made to treat occlusions in the carotid arteries leading to the brain. However, such arteries have been very difficult to treat because of the possibility of dislodging plaque which can enter various arterial vessels of the brain and cause permanent brain damage. Attempts to treat such occlusions with balloon angioplasty have been very limited because of such dangers. In surgical treatments, such as endarterectomy, the carotid artery is slit and plaque is removed from the vessel in the slit area. Such surgical procedures have substantial risk associated with them which can lead to morbidity and mortality.

In other procedures, such as in angioplasty and in the treatment of peripheral arteries and veins, there is the possibility that the guide wires and catheters used in such procedures during deployment of the same may cause dislodgement of debris or emboli which can flow downstream and cause serious damage, such as stroke, if they occlude blood flow in smaller vessels. Moreover, when treating aneurysms, coils or other objects deployed to fill the aneurysm may break free and become lost downstream. Thus, in summary, embolization and migration of micro-emboli downstream to an end organ is a major concern of cardiologists during catheterizations.

Accordingly, what is needed is an exchange method for use during treatment of narrow blood vessels such as the carotid arteries, coronary arteries and saphenous vein grafts. Specifically, what is needed is a method which allows an exchange of catheters while a distal occluding device is deployed to perform treatment within the vessel and to contain emboli produced, created, or used during the treatment procedure. Furthermore, because a distal occluding device may block the flow of blood to vital organs, it is desirable that the exchange be performed quickly and easily in order to minimize the time that the blood vessel is occluded.

SUMMARY OF THE INVENTION

The present invention satisfies the above needs by providing a method for exchanging catheters during an emboli containment procedure. As described herein, the term "emboli" may refer to any debris, particles, or other objects found, created or placed in a blood vessel. "Emboli containment" may refer to emboli removal, neutralization, disintegration, minimization, or simply to preventing emboli from moving downstream. In essence, "containment" refers to any procedure which reduces the deleterious effects that emboli may have on the patient. The preferred exchange method is particularly useful in angioplasty and similar procedures in smaller blood vessels such as the coronary or carotid arteries or in saphenous vein grafts. The exchange method described herein can be accomplished rapidly to minimize the time that a treated blood vessel is occluded for treatment.

For example, in most angioplasty procedures, a guidewire is first introduced into the vasculature of a patient until the distal end of the guidewire is near the occlusion or stenosis. The guidewire preferably bears a distal occlusion device, such as a balloon, filter, coil, or combination of these elements. The occlusive device is preferably activated prior to performing therapy to remove or reduce an occlusion or stenosis, to provide a working area and to prevent particles and debris produced during therapy from migrating downstream. The occlusive device may completely or partially occlude the vessel.

In order to perform an exchange over the guidewire catheter, the catheter must be made such that the occlusive device remains activated in order to minimize particles from going downstream. Furthermore, the proximal end of the guidewire must have a low profile to accommodate other catheters which are to be advanced over the guidewire. In one preferred method, a therapy catheter is advanced over a proximal end of the guidewire to the site of the plaque or lesion. After deploying the occlusive device on the end of the guidewire, therapy is performed on the lesion by the therapy device. One preferred therapy device is a dilatation catheter which compresses the lesion against the walls of the vasculature. In addition to dilatation balloon catheters, other forms of therapy may be used to dislodge, disintegrate, or neutralize the plaque. One method is to provide an ultrasonic catheter which targets the plaque and destroys it using shock waves. Another method is to use a vibration delivery catheter, which causes the plaque to break up due to a vibrating wire. Another method uses a drug delivery catheter provided over the guidewire, which provides fluids to dissolve the plaque. Other types of therapy include radiation therapy.

After treatment of the plaque by an appropriate therapy method, emboli often remain in the working area. The therapy catheter can then be removed and exchanged with an emboli removal catheter, such as an aspiration catheter for aspirating the emboli from the working area. The aspiration catheter can then be exchanged with another therapy catheter, such as a catheter bearing a stent which is deployed onto the lesion for maintaining the opening of the blood vessel.

The present invention in a preferred embodiment allows for the rapid and easy exchange of catheters by deploying the occlusive device in stages. For instance, when a

guidewire with a distal occlusion balloon is used, the balloon is inflated only when there is danger of emboli moving downstream. Thus, if treatment of the stenosis consists of a dilatation procedure and deployment of a stent, the occlusion balloon will be inflated for a first inflation period during which the dilatation balloon works on the plaque, the dilatation catheter is exchanged with an aspiration catheter, and the aspiration catheter removes emboli from the vessel. After aspiration, the occlusion balloon can safely be deflated to allow blood flow for a period to organs downstream. An exchange can then be performed with another therapy catheter, such as a stent deploying catheter, and the occlusion balloon is reinflated for a second inflation period to deploy a stent to the location of the stenosis. By employing an exchange method with vessel occlusion occurring in stages, the time that blood flow is occluded in the vessel decreases, thereby minimizing the risks to the patient and presenting significant advantages over known technology. The speed of exchange is also improved by using an adaptor which allows for easy and quick handling of the guidewire for inflation and deflation.

BRIEF DESCRIPTION OF THE DRAWINGS

FIG. **1A** is a schematic view of a patient undergoing treatment by a preferred aspect of the exchange method of the present invention.

FIG. **1B** is a perspective view of a human heart with a saphenous vein graft.

FIG. **2** is an enlarged perspective view of the proximal end of the guidewire shown in FIG. **1A**, particularly showing an exchange method between a therapy catheter and an aspiration catheter.

FIGS. **3A** is a perspective view of an over-the-wire therapy catheter having a dilatation balloon on its distal end and guidewire inserted into a saphenous vein graft in accordance with a preferred aspect of the present invention, with the vein graft shown partially cut away.

FIG. **3B** is a perspective view of a guidewire inserted into a saphenous vein graft after the therapy catheter of FIG. **3A** has been removed, with the vein graft shown partially cut away.

FIG. **3C** is a perspective view of an over-the-wire aspiration catheter and a guidewire inserted into a saphenous vein graft after an exchange with the therapy catheter of FIG. **3A** has been performed, with the vein graft shown partially cut away.

FIG. **3D** is a perspective view of an over-the-wire stenting balloon and a guidewire inserted into a saphenous vein graft after an exchange with the aspiration catheter of FIG. **3C** has been performed, with the vein graft shown partially cut away.

FIG. **4** is a side view of a guidewire inserted into a saphenous vein graft, the guidewire having a radiopaque marker for targeting by an external shock wave generator, with the vein graft shown partially cut away.

FIG. **5** is a side view of a vibration delivery catheter and a guidewire inserted into a saphenous vein graft, with the vein graft shown partially cut away.

FIG. **6** is a side view of a drug delivery catheter and a guidewire inserted into a saphenous vein graft, with the vein graft shown partially cut away.

FIG. **7** is a side view of an aspiration catheter and a guidewire inserted into an artery being treated for an aneurysm, with the artery shown partially cut away.

FIG. **8** is a chart showing the inflation times of a distal occlusion balloon for 24 patients being treated in a preferred aspect of the exchange method of the present invention.

FIG. **9** is a side view of a catheter incorporating the low profile valve in a preferred aspect of the present invention.

FIG. **10** is an enlarged view of the proximal portion of the catheter of FIG. **10** showing an exterior view of the catheter segment featuring the low profile valve in a preferred aspect of the present invention.

FIG. **11A** is a longitudinal cross-sectional view of the catheter segment of FIG. **10** showing the low profile valve in the open position.

FIG. **11B** is a longitudinal cross-sectional view of the catheter segment of FIG. **10** showing the low profile valve in the closed position.

FIG. **12** is a longitudinal cross-sectional view of an alternative embodiment, showing the low profile valve in the closed position.

FIG. **13** is a longitudinal cross-sectional view of the embodiment of FIG. **12** showing the low profile valve in the open position.

FIG. **14** is a longitudinal cross-sectional view of an alternative embodiment of the low profile valve, depicting the valve in the open position

FIG. **15** is a longitudinal cross-sectional view of the embodiment of FIG. **14** depicting the valve in the closed position.

FIG. **16** is a perspective view of an inflation adaptor used to manipulate the low profile valve in a preferred aspect of the present invention.

FIG. **17A** is a perspective view of the interior of the inflation adaptor of FIG. **16**.

FIG. **17B** is a perspective view of a catheter with a sealing member and alignment indicia being positioned in the inflation adaptor of FIG. **17A**.

FIG. **17C** is a perspective view of an inflation adaptor attached to a syringe system.

FIG. **17D** is a side view of an aspiration catheter attached to a syringe system.

FIG. **18** is an end view of an alternative embodiment of the inflation adaptor.

FIG. **19** is a cross-sectional view of the inflation adaptor of FIG. **18** along lines **19**—**19**.

FIGS. **20** and **21** are exploded views of alternative embodiments of the low profile valve in a preferred aspect of the present invention.

FIG. **22** is an alternative embodiment of the valve in a preferred aspect of the present invention featuring a built in spring bias.

FIGS. **23A** and **23B** are longitudinal cross-sectional views of the catheter proximal end of FIG. **22** showing the valve in the closed and open position, respectively.

FIG. **24** is a perspective view of an alternative embodiment of an inflation adaptor used to manipulate the low profile valve in a preferred aspect of the present invention.

FIG. **25** is a perspective view of the interior of the inflation adaptor of FIG. **24**.

FIGS. **26A** and **26B** are top views of the inflation adaptor of FIGS. **24** and **25**, illustrating the latch locking mechanism.

FIGS. **27A**–**27C** are schematic cross-sectional views of the adaptor of FIG. **24** which illustrate the cam locking door mechanism which provides mechanical advantage to the adaptor locking latch.

FIGS. **28A**–**28C** are close-up views of an embodiment of the adaptor having a sliding top panel biased by a spring mechanism.

FIGS. **29** and **30** are cross-sectional views of a proximal section of a catheter having an alternative embodiment of the valve in a preferred aspect of the present invention.

FIG. **31** is a side-elevational view in section of one embodiment of a catheter apparatus incorporating a preferred aspect of the present invention for treating occluded vessels.

FIG. **32** is a side-elevational view in section similar to FIG. **31** but showing the apparatus in FIG. **31** with the expansion member (in this case, a self-expandable seal) deployed.

FIG. **33** is a side-elevational view in section of another embodiment of a catheter apparatus incorporating a preferred aspect of the present invention for treating occluded vessels.

FIG. **34** is a view similar to FIG. **33** but showing the expansion member (in this case, a self-expandable seal) deployed.

FIG. **35** is a side-elevational view in section of another embodiment of a catheter apparatus incorporating a preferred aspect of the present invention for treating occluded vessels.

FIG. **36** is a view similar to FIG. **35** but showing the expansion member deployed and the sleeve completely removed.

FIG. **37** is a schematic, longitudinal cross sectional view of an embodiment in which a membrane only partially surrounds a braid used as the expansion member.

FIGS. **38**A and **38**B show end views of unperforated and perforated membranes, respectively.

FIG. **39** is a schematic, longitudinal cross sectional view of an embodiment in which a braid without a membrane is used.

FIG. **40** is a schematic, longitudinal cross sectional view of an embodiment in which a filter-like mesh is used as the expansion member.

FIG. **41** is a schematic, longitudinal cross sectional view of an embodiment in which a slotted tube is used as the expansion member.

FIG. **42** is a perspective view of the slotted tube used in the embodiment of FIG. **41**.

FIG. **43** is a schematic, longitudinal cross sectional view of an embodiment in which a coil is used as the expansion member, and the proximal end of a membrane surrounding the coil adjoins the coil.

FIG. **44** is a schematic, longitudinal cross sectional view of an embodiment in which a coil is used as the expansion member, and the proximal end of a membrane surrounding the coil adjoins a sheath that surrounds both first and second elongate members.

FIG. **44**A is an embodiment similar to that shown in FIG. **44** in which resistive heating is used to expand the expansion member, with current being conducted through wires being attached to either side of the expansion member. The expansion member as shown is partially deployed.

FIG. **44**B is an embodiment similar to that shown in FIG. **44**A in which resistive heating is used to expand the expansion member, with current being conducted through a wire being attached to the distal end of the expansion member and through a coating on the first elongate member. The expansion member as shown is partially deployed.

FIG. **45** is a schematic, side cross sectional view of an embodiment in which a plurality of ribbons are used as the expansion member.

FIG. **45**A is an embodiment similar to that shown in FIG. **45** in which a warm solution passes between the first and second elongate members to transfer heat to the expansion member, causing it to expand. The expansion member as shown is partially deployed.

FIG. **45**B is an embodiment similar to that shown in FIG. **45**A in which a warm solution passes through the first elongate member to transfer heat to the expansion member, causing it to expand. The expansion member as shown is partially deployed.

FIG. **45**C is an embodiment similar to that shown in FIGS. **45**A and **45**B, in which a warm solution passes through one or more lumens in the first elongate member to transfer heat to the expansion member, causing it to expand. The expansion member as shown is partially deployed.

FIG. **46** is a schematic, side cross sectional view of an embodiment in which a plurality of ribs are used as the expansion member.

FIG. **47** is an isometric view of an embodiment of the invention in which a pull wire is used to deploy a plurality of non-self-expanding ribbons surrounded by a membrane.

FIG. **48** is a side partial sectional view of the embodiment of FIG. **43** in which the ribbons are in their relaxed, undeployed position.

FIG. **49** is a side elevational view of the embodiment of FIG. **47** in which the ribbons are deployed, and the membrane makes a seal with the vessel.

FIGS. **50**A and **50**B show longitudinal and end perspective views, respectively, of a locking mechanism used with a wire that deploys an expansion member.

FIG. **50**C is a perspective view of the locking mechanism of FIGS. **50**A and **50**B, further showing an adaptor for utilizing the locking mechanism.

FIG. **51**A is a perspective view of an alternative locking mechanism used with a wire that deploys an expansion member.

FIG. **51**B is a perspective view of the alternative locking mechanism of FIG. **51**A, further showing an adaptor for utilizing the locking mechanism.

FIGS. **52**A, **52**B, **52**C, and **52**D show, respectively, a braid, a filter-like mesh, a slotted tube, and a plurality of coils, which can be used as alternative expansion members in place of the ribbons in the embodiment of FIG. **47**.

DESCRIPTION OF THE PREFERRED EMBODIMENTS

I. Exchange Method During Emboli Containment

The method discussed herein allows for the rapid exchange of catheters during angioplasty and similar procedures. In particular, the preferred method of the present invention is adapted for use in the treatment and removal of an occlusion in a blood vessel in which the occlusion has a length and a width or thickness which at least partially occludes the vessel's lumen. Thus, the catheters of a preferred aspect of the present invention are effective in treating both partial and complete occlusions of the blood vessels. As used herein, "occlusion" includes both partial and complete occlusions, stenoses, emboli, thrombi, plaque and any other substance which at least partially occludes the vessel's lumen.

The method and apparatus of the present invention preferably can be used in any vessel of the body where the pressure is at least 0.2 psi at any stage of the heart pumping cycle, and more preferably, is about 1.2 psi, with a flow rate of at least 10 cc per minute. The method and apparatus are

particularly suited for use in removal of occlusions from saphenous vein grafts, coronary and carotid arteries, and in other non-branching vessels having similar pressures and flow where a suitable working area can be created. Although the present invention will be described in connection with a saphenous vein graft, it should be understood that this application is merely exemplary, and the method can be used in other blood vessels as well. For example, it will be appreciated that the described method can also be applied to coronary arteries, carotid arteries, or any other arteries or veins where treatment and containment of emboli is desired.

A. The Preferred Treatment Method

In one preferred aspect of the present invention, a catheter or guidewire **10** is inserted into the human body **1** through a groin insertion site **3**, as shown in FIG. **1**A. The guidewire **10** is passed through the femoral artery **5** and into the blood vessel network until it reaches the intended treatment site, which, as shown in FIG. **1**B, is a saphenous vein graft **2**. The graft **2** is used to bypass one of the occluded coronary arteries **4**, and connects the aorta **6** to the coronary artery at a location distal the occlusion **8**. Fluoroscopy is typically used to guide the guidewire and other devices to the desired location within the patient. The devices are frequently marked with radiopaque markings to facilitate visualization of the insertion and positioning of the devices within the patient's vasculature.

The catheter **10** used for the preferred method is shown in FIGS. **9**–**11**B. As described in further detail below, the catheter **10** comprises a tubular body **18** having a central lumen **40** extending between a proximal end **12** and a distal end **14**. An inflation port **22** is provided near the proximal end **12** of the tubular body, which allows inflation fluid to pass through central lumen **40** to a distally mounted occlusive device, such as a balloon **20**. A sealing member **30** is inserted to the lumen **40** at opening **23** of the tubular body. This sealing member extends into the lumen **40** and plugs the inflation port **22** to maintain balloon inflation, as described in more detail with respect to FIGS. **11**A and **11**B below.

FIG. **2** shows an enlarged view of the proximal end of the guidewire **10** with sealing member **30** inserted therein. Both the guidewire **10** and the sealing member **30** have substantially the same diameter, thereby allowing a catheter or guidewire having at least one inner lumen to pass over the two. This inner lumen can be made small to have substantially the same diameter as the outer diameter of the guidewire and sealing member. In the preferred embodiment, the outer diameter of the tubular body **18** and the sealing member **30** is about 0.014 inches. Therefore, catheters having a lumen with a diameter as small as 0.014 inches may be exchanged over the guidewire **10**.

FIG. **2** also illustrates an exemplary exchange method. Where guidewire **10** carries a first treatment catheter such as a therapy catheter **50** having a dilatation balloon **52**, this therapy catheter **50** can be slid off the proximal end of the guidewire **10** and sealing member **30**. Then, a second treatment catheter such as an aspiration catheter **60** may be slid over the proximal ends of the sealing member **30** and the guidewire **10** toward the treatment location. Further details regarding this exchange are described below.

1. Insertion of the Guidewire

FIGS. **3**A–**3**D show more explicitly a preferred method of containing and aspirating embolic material while performing a balloon angioplasty and stenting therapy. FIG. **3**A shows a lesion or plaque **42** on the walls of a saphenous vein graft **2**. A catheter or guidewire **10** is advanced into the blood vessel to a point distal of the lesion **42**. The method of a preferred aspect of the present invention can effectively be carried out using a number of guidewires or catheters that perform the function of occluding the vessel and allowing for the slidable insertion of various other catheters and devices. The term "catheter" as used herein is therefore intended to include both guidewires and catheters with these desired characteristics. As described in further detail below, the catheter has an occlusive device, such as an inflatable balloon, filter or other mechanical occlusive device, attached at its distal end. The occlusive device should be capable of preventing the migration of particles and debris from the working area, either through total or partial occlusion of the vessel. Note that the occlusion of the vessel need not be complete. Substantial occlusion of the vessel can be sufficient for purposes of the present invention.

The guidewire **10** should be sized so as to be slidable with respect to the therapy, aspiration or other catheters to be inserted over the guidewire. When the guidewire is properly positioned inside the vessel, the occlusive device at the distal end of the guidewire is actuated to occlude the vessel distal to the existing lesion to create a working area. With the occlusive device effectively blocking the flow of emboli downstream, various catheters may be exchanged over the guidewire **10** to treat the vessel without the risk of emboli flowing downstream and cutting off blood flow to vital organs.

In non-bifurcated areas of the blood vessels, it has been discovered that fluid from the proximal portion of the same vessel acts as an infusion source. One therefore need only occlude the distal portion of the vessel to create a working area surrounding the occlusion and allow blood to flow from the proximal portion of the vessel into the working area. It should be noted that, as used herein, "proximal" refers to the portion of the apparatus closest to the end which remains outside the patient's body, and "distal" refers to the portion closest to the end inserted into the patient's body. Thus, the embodiment described above only provides an occlusive device distal to the working area.

However, an embodiment is also contemplated wherein the working area is defined by occlusive devices located both proximal and distal to the lesion **42**. In this embodiment, a guide catheter having a single lumen is first introduced into the patient's vasculature through an incision made in the femoral artery or vein in the groin and used to guide the insertion of other catheters and devices to the desired site. This guide catheter carries an occlusion balloon or other occlusive device to occlude the vessel proximal to the lesion **42**. Following insertion of the guide catheter, a second catheter is inserted through the guide catheter and past the site of the occlusion. This second catheter serves as the exchange catheter or guidewire over which various catheters may be advanced and removed.

2. Therapy Catheter/Aspiration Catheter Exchange

As shown in FIG. **3**A, once the guidewire **10** is in place, a therapy catheter may then be delivered to the site of the occlusion. The therapy catheter can employ any number of means for treatment, including a balloon catheter used to perform angioplasty, a catheter which delivers a stent, a catheter for delivering enzymes, chemicals, or drugs to dissolve or treat the occlusion, an atherectomy device, or a laser or ultrasound device used to ablate the occlusion.

The therapy catheter **50** of the preferred embodiment includes a dilatation balloon **52** located on the distal end of an elongate tubular body **54**. The tubular body **54** has a lumen **56** extending from a proximal end to the distal end of the tubular body which is sized to override the guidewire **10** until the dilatation balloon **52** reaches the point of the lesion

42. Once balloon **52** is in place, the occlusion balloon **20** on guidewire **10** is inflated to at least partially block blood flow. Then, the dilatation balloon **52** is inflated to compress the plaque **42** against the walls of the blood vessel. This inflation has the effect of dislodging some plaque and creating emboli **48** (shown in FIG. **3**B) in the working area.

In the preferred method, after treatment by the therapy catheter **50** is completed, the therapy catheter is completely removed from the body by sliding the therapy catheter over the guidewire **10** in a proximal direction away from the lesion and out of the body, leaving only the guidewire **10** as shown in FIG. **3**B. A rapid exchange is then performed and, as illustrated in FIG. **3**C, an aspiration catheter **60** is deployed over the guidewire **10**. The term "aspiration catheter" includes any device which creates an area of fluid turbulence and uses negative pressure and reverse flow to aspirate fluid and debris, and includes those devices which create a venturi effect within the vessel. Aspiration catheter **60** as shown in FIG. **3**C is an elongate tubular body having a lumen extending from a proximal end to a distal end. It should be noted that any particles which break free during therapy and aspiration procedures will be kept at the site of the procedure within the working area by the occlusive device occluding the distal portion of the vessel in combination with the blood pressure coming from the proximal portion of the vessel. The debris is prevented from migrating elsewhere, and remains localized for removal by aspiration. Further details regarding aspiration catheters are described in assignee's pending application entitled ASPIRATION SYSTEM AND METHOD, application Ser. No. 09/026,013, filed Feb. 19, 1998, now U.S. Pat. No. 6,152,909, the entirety of which is hereby incorporated by reference. Once aspiration is completed, the balloon **20** may be deflated to resume blood flow through the vessel.

Preferably, the procedure described above is perform twice using a predilatation catheter and a dilatation catheter. The predilatation catheter is a first therapy catheter which is advanced over the proximal end of the guidewire **10** to the point of the lesion **42**. The balloon on the distal end of the predilatation catheter has a first inflation diameter designed to perform a first treatment to the lesion **42**. The predilatation catheter is then exchanged with an aspiration catheter to aspirate emboli formed by the first treatment, while the occlusion balloon remains inflated. After aspiration, the occlusion balloon **20** is deflated to allow blood to flow to organs downstream, and then reinflated after exchange of the aspiration catheter for the dilatation catheter. This second therapy catheter has a dilatation balloon with a larger inflation diameter than the first dilatation balloon so as to further compress the plaque **42** against the vessel walls. Once this treatment is completed, the second therapy catheter is exchanged with the aspiration catheter for removing emboli from the blood system.

Further exchanges of therapy catheters having successively larger dilatation balloons with aspiration catheters are also contemplated by the present invention, with each exchange occurring while the distal occlusion balloon is inflated. Moreover, it is not always necessary to follow treatment with a therapy catheter with an exchange for an aspiration catheter. Therapy catheters can be exchanged with other therapy catheters to perform further treatment in the blood vessel before an exchange with an aspiration catheter is made.

3. Stent Catheter Exchange

In the preferred method of the present invention, following treatment of the lesion and aspiration by one or more sequences as described above, the occlusion balloon **20** is deflated to resume blood flow to the vessel. Another catheter exchange is performed whereby the aspiration catheter is removed from the guidewire **10** and exchanged with a deployment catheter carrying a stent. As shown in FIG. **3**D, the deployment device may be a catheter **70** carrying a balloon **72** holding an angioplasty stent **74**. Once the catheter **70** reaches the point of lesion, the occlusion balloon **20** is reinflated to prevent any particles dislodged by the stenting process from migrating downstream. The balloon **70** is then inflated to expand the stent to its working diameter, and is sized to implant the stent into the vascular wall. Plastic deformation of the stent prevents it from collapsing once the balloon has been deflated and removed from the patient. Further details regarding stents are contained in assignee's pending application entitled STENT POSITIONING APPARATUS AND METHOD, application Ser. No. 08/744,632, filed Nov. 6, 1996, the entirety of which is hereby incorporated by reference. After the stent is in place, an exchange may be performed between the deployment catheter **70** and the aspiration catheter **60** to remove any debris formed by the stenting process. After aspiration, the occlusion balloon **20** is deflated and the aspiration catheter is removed.

B. Alternative Exchange Methods

The method described above is merely exemplary, and it should be recognized that the catheter exchange method may utilize a variety of exchanges of different types of catheters while emboli are being contained. The term "therapy catheter" is meant to include any of a number of known devices used to treat an occluded vessel. For example, a catheter carrying an inflatable balloon for use in balloon angioplasty can be delivered to dilate the occlusion. Thermal balloon angioplasty includes the use of heat to "mold" the vessel to the size and shape of the angioplasty balloon. Similarly, an intravascular stent can be delivered via a balloon catheter and deployed at the site of the occlusion to keep the vessel open. Cutting, shaving, scraping or pulverizing devices can be delivered to excise the occlusion in a procedure known as atherectomy. A laser or ultrasound device can also be delivered and used to ablate plaque in the vessel. Various thrombolytic or other types of drugs can be delivered locally in high concentrations to the site of the occlusion. It is also possible to deliver various chemical substances or enzymes via a catheter to the site of the stenosis to dissolve the obstruction. The term "therapy catheter" encompasses these and similar devices.

FIG. **4** shows an alternative embodiment employing a distal occlusion catheter for use in directing shockwaves to disintegrate the plaque **42**. The catheter **10** comprises a radiopaque marker **44** located proximal to the distal balloon **20**. The marker **44** is used to locate the plaque **42** for targeting by external shock wave generator **46**. After inflation of the balloon, the shock wave generator **46** is focused onto the plaque **42** by use of the radiopaque marker to disintegrate the plaque.

After treatment of the plaque by the shock wave generator, an aspiration catheter **60** as described in FIG. **3**C may be slid over the guidewire **10** for aspirating the emboli created by the shock wave treatment. Alternatively, the shock wave treatment may be performed with the aspiration catheter **60** already advanced over the guidewire **10**. In such an embodiment, a radiopaque marker may either be placed on the guidewire or aspiration catheter itself for targeting the location of the plaque. Furthermore, the method described above may be implemented using ultrasounds for focusing of the shock wave generator to the plaque. For instance, a target balloon on a catheter may be advanced over the guidewire to the location of the lesion and inflated with air.

Air provides a medium with a significantly different acoustical impedance than body tissue. This results in good ultrasound visualization for targeting the lesion. This catheter is then exchanged with an aspiration catheter for removing emboli from the vessel. Further exchanges with a stent deployment catheter or other types of therapy catheters may be performed as described above.

FIG. **5** shows another alternative therapy method for treating the plaque **42**. A vibration delivery catheter **80** is advanced over the guidewire **10** to a position adjacent the lesion **42**. The vibration delivery catheter is preferably a monorail catheter having two lumens **82** and **84**, lumen **82** serving as a passageway through which the guidewire **10** passes, and lumen **84** serving as a passageway for a waveguide or coupling member in the form of a wire **86**. The guidewire lumen **82** as shown in FIG. **5** is located only on the distal end of the vibration delivery catheter. However, the lumen **82** can be made to extend the entire length of the catheter **80** if desired. One end of wire **86** contacts the lesion **42**, while the other end extends out of the free end of catheter **80** outside the body of the patient and is attached to a transducer **88**. With the occlusion balloon **20** inflated, by activating the transducer the wave guide **86** is caused to act on the lesion **42** with transverse and longitudinal motion of the end of the wave guide to machine away or disintegrate the lesion **42**. Exchanges may be performed following this treatment with the aspiration, therapy or other catheters as described above.

FIG. **6** shows an alternative therapy method wherein a drug delivery catheter **90** is advanced over guidewire **10** to dissolve the plaque **42**. The catheter **90** is preferably a monorail catheter having two lumens **92** and **94**, the lumen **92** riding over the guidewire **10**. The drug delivery lumen **94** extends from a proximal end **96***a* to a distal end **96***b*, with the distal end **96***b* positioned adjacent the lesion to be treated. At the proximal end, an infusion port **97** is provided for delivering drugs **99** to the location of the lesion. Preferable materials for use in dissolving the lesion **42** are TPA (tissue plasminogen activator) available from Genentech, Inc., or pro-urokinase, available from Abbott Laboratories. Also at the proximal end, an aspiration port **98** is provided for removing emboli created by the procedure. Alternatively, the drug delivery catheter may be exchanged with a separate aspiration catheter for performing emboli containment. After dissolution of the lesion **42**, exchanges may be made with stent carrying catheters or other catheters as described above.

The exchange method as described in a preferred aspect of the present invention is not applicable solely to procedures dislodging emboli. Rather, the present exchange method also applies to any situation wherein a distally occluding device prevents the migration of undesired particles downstream. For instance, as shown in FIG. **7**, an aneurysm of an artery is shown, wherein a bulge **162** is found in artery **160**. Guidewire **10** carrying distal occlusion balloon **20** is advanced through the vessel such that the balloon **20** is located distal to the bulge **162**. The balloon **20** is inflated so that various treatment and/or aspiration catheters may be exchanged to perform treatment on the aneurysm. In treating aneurysms, one preferred method is to fill the bulge **162** with embolization elements **164**. The distal occlusion balloon **20** is necessary because some of these particles may break free and migrate downstream. An exchange is also desired for treating aneurysms because deployment of particles **164** must be done sequentially, with subsequent catheters delivering more and more embolization elements to fill bulge **162**. Thus, a catheter exchange over the guidewire **10** is desirable for rapidly filling the bulge **162** while the distal occlusion balloon **20** is inflated. An exchange is further desired to advance an aspiration catheter into the vessel to remove any particles that may have come loose while treating the aneurysm.

C. Exchange Methods Over Alternative Occlusive Devices

Although the embodiments described above refer to a distally occluding balloon to prevent emboli from migrating downstream, other methods for occluding the blood vessel may be used while performing the exchange method described in a preferred aspect of the present invention. With respect to all of these methods, the proximal ends of the expansion members are sized to allow an exchange of catheters over the catheter or guidewire bearing the expansion member. These methods as briefly discussed herein are described in further detail below in the section entitled "Expansion Members."

In FIGS. **35–36**, a catheter apparatus is shown having a self-expanding sealing mechanism. As shown in FIG. **35**, the catheter apparatus **1781** comprises a guiding catheter **1782** with a self-expanding sealing mechanism **1791** mounted on distal end **1784**. The sealing mechanism **1791** is enclosed by an elongate sleeve **1796** having a collar **1801** mounted on the proximal extremity **1797** of sleeve **1796**. The collar **1801** serves as a mechanism for retracting the sleeve to uncover self-expanding sealing mechanism **1791** after the catheter has been deployed to permit the self-expanding sealing mechanism **1791** to expand and form a seal with the vessel adjacent the stenosis to be treated. Sleeve **1796** may be completely removed, as shown in FIG. **36**, to permit catheters with inner lumen diameters substantially the same as the outer diameter of the guiding catheter to be exchanged over the catheter. The various types of occlusive devices provided at the distal end of these catheter apparatuses and their manner of operation are more particularly described below with respect to FIGS. **31–46**.

The preferred exchange method of the present invention may also be performed over catheters or guidewires employing non-self-expanding or mechanically deployed sealing mechanisms. As shown in FIGS. **47–51**B, described in further detail below, a pull wire device may be utilized for deploying an occlusive mechanism to a blood vessel while still maintaining a low profile at the proximal end of the device to allow for an exchange. As shown in FIG. **49**, one pull wire device comprises an elongate member **1166** over which therapy, aspiration and other catheters may be advanced and removed. At the proximal end of the device, a rotatable handle **1180** is attached to a locking member **1184**. The wire **1140** is pulled by handle **1180** from its configuration shown in FIG. **50**A until the locking member **1184** clears the proximal end of elongate member **1166**, at which point member **1184** is rotated to the configuration shown in FIG. **50**B to hold the wire **1140** taut. The handle **1180** and locking member **1184** are dimensioned to be substantially the same size as the elongate member **1166**, which preferably has an outer diameter of 0.014 inches, such that other catheters may be advanced and removed over the elongate body **166** without interference from the handle **1180** or locking member **1166**.

FIG. **51**A shows an alternative pull wire mechanism wherein a spacer **1194** is placed between a handle **1190** and elongate body **1166** to pull wire **1140** and deploy the sealing mechanism. Because the handle **1190** and the spacer **1194** have the same diameter as the elongate body **1166**, the exchange method as described above may be performed over the elongate body **1166** with catheters having relatively small inner diameters.

D. Speed of Exchange

The method described by a preferred aspect of the present invention is particularly advantageous in that it allows for a rapid exchange of catheters to reduce the time that a blood vessel is occluded by a balloon or other occlusive device. FIG. **8** shows experimental results for 24 patients undergoing percutaneous transluminal coronary angioplasty (PTCA) and subsequent stenting treatments in saphenous vein grafts. More particularly, FIG. **8** shows the inflation durations of occlusion balloon **20** during the treatment procedure, i.e., the time that the balloon **20** is inflated to occlude the vessel. The preferred method minimizes the times that the occlusion balloon is inflated by conducting the treatment in stages. For instance, a first stage, corresponding to a first inflation time, may comprise a sequence of therapy and aspiration treatments. After occlusion balloon inflation, a therapy catheter carrying a dilatation balloon may be used to compress the lesion. Exchanges with subsequent therapy catheters may then be performed, as long as end organs positioned downstream can tolerate the loss of blood due to blockage by the occlusion balloon. At the end of this first stage of treatment, the therapy catheter positioned on the guidewire is exchanged for an aspiration catheter. After aspiration is completed, the balloon is deflated.

Second and third inflation durations as indicated in FIG. **8** may similarly correspond to subsequent sequences of therapy and aspiration treatments. After the occlusion balloon is deflated and the first sequence ends, the aspiration catheter is exchanged for another therapy catheter. Once the second therapy catheter is in place, the occlusion balloon is reinflated and the lesion is treated in the same manner as described above. Alternatively, the second and third inflation durations may refer to a therapy catheter which deploys a stent. In this embodiment as well, the occlusion balloon is not inflated until the aspiration catheter has been exchanged with the stent deploying catheter. By performing the treatment in such a manner, the amount of time that blood flow is blocked in the treated vessel is minimized.

Thus, the inflation durations as shown in FIG. **8** generally represent the amount of time it takes to perform a therapy treatment using one or more therapy catheters exchanged over the guidewire, exchange the therapy catheter for an aspiration catheter, and aspirate emboli. As shown in FIG. **8**, the mean time to accomplish this procedure was about 150 seconds. FIG. **8** also shows a general reduction in inflation durations from patient **1** to patient **24** as the clinician improved in performing the exchange over time. Accordingly, in a preferred aspect of the present invention, providing a rapid exchange method for use during emboli containment allows the clinician to quickly perform a treatment procedure while minimizing the risk to the patient due to blockage of blood flow.

The preferred method also reduces the treatment time by providing the catheter **10** with a side-access inflation port **22**, as shown in FIG. **9**. To inflate the occlusion balloon **20**, the guidewire **10** is preferably inserted into an inflation adaptor, as described below with respect to FIGS. **16–19**, **24–28**C. By providing the inflation port **22** on the side of the guidewire **10**, the adaptor can easily be attached to the guidewire and quickly inflate or deflate the balloon **20** by a simple movement such as moving actuator **220**, as shown in FIG. **16**. This in turn reduces the amount of time that the balloon **20** occludes a treated blood vessel.

Furthermore, use of an adaptor makes the catheter much easier to handle. Because the guidewire **10** is so small, it may difficult to handle by clinicians. By using an adaptor, however, the clinician need only insert the wire into the adaptor, close the adaptor, and actuate the adaptor, as described in further detail below.

Additionally, as shown in FIG. **17**C, an adaptor **200**, described in further detail below, is preferably attached to a low volume syringe **294** and a high volume syringe **295**. An extension line **293** is attached to fitting **210** to allow fluid flow to and from adaptor **200**. Low volume syringe **294** is provided for accurate inflation of balloon **20**. More particularly, low volume syringe is provided so that inflation can be performed safely and quickly. High volume syringe **295** is provided for rapid deflation of balloon **20**. By using this syringe system, inflation and deflation of balloon **20** through an adaptor can be performed quickly and efficiently. Further details regarding a syringe system are described in assignee's pending application entitled SYRINGE AND METHOD FOR INFLATING LOW VOLUME CATHETER BALLOONS, application Ser. No. 09/025,991, filed Feb. 19, 1998, now abandoned the entirety of which is hereby incorporated by reference.

Moreover, by providing an access port on the side of the tubular body **18**, the port **22** can be made with a large cross-section to increase the amount of fluid passing through the port. This in turn decreases the time necessary for inflating or deflating balloon **20**. In addition, as described in more detail below, the use of a side-access port allows for more efficient opening and closing of the port **22**. Preferably, a sealing member **30** moves slidably within tubular body **18** to plug and unplug port **22**. Because member **30** remains attached to the catheter **10** even when the port **22** is open, the operator never has to remove the sealing member. Accordingly, the sealing member is always in place, thereby reducing the time that it takes to open or close inflation port **22**.

The speed of exchange is also increased by using an aspiration catheter with a high volume syringe. As shown in FIG. **17**D, aspiration catheter **60** is attached to an aspiration line **296**, connecting the aspiration catheter **60** with a high volume syringe **297**. The high volume syringe allows rapid aspiration of emboli from the treated vessel, thereby reducing the time that the occlusion balloon **20** must be inflated. Further details regarding aspiration are disclosed in the above-referenced application entitled ASPIRATION SYSTEM AND METHOD.

E. Diagnostic Methods

The preferred exchange method of the present invention is also applicable to diagnostic methods. In one preferred aspect of the present invention, a method is provided wherein emboli found or created in the body are removed from the body for diagnostic testing. A guidewire with a distal occlusive device is inserted into the body to a point distal of plaque. A therapy catheter is advanced over the guidewire to the location of the plaque. After the distal occlusion device is deployed, a therapy treatment, such as inflation of a dilatation balloon or any other means as described above, is performed to break up the plaque and produce emboli. The therapy catheter is then exchanged with an aspiration catheter while the occlusion device remains deployed, and the aspiration catheter removes the particulate matter for analysis.

In the procedures conducted on the 24 patients described above in FIG. **8**, particulate matter was retrieved in all but 1 of 23 procedures and 45 of 48 aspirations. Mean particle size was 168 μm (range 8 to 3,427 μm) in the major axis, 80 μm (range 6 to 815 μm) in the minor axis, with an area of 32,117 μm^2 (range 42 to 4,140,000 μm^2). Particulate material consisted predominantly of cholesterol clefts, lipid-rich macrophages, fibrous caps, necrotic core and fibrin material.

Atherosclerotic material in the precipitate sections was quantified as maximal in 5 aspirates, moderate in 9, minimal in 26, and none in 3.

Vein graft aspirate was collected in tubes containing EDTA-citrate buffer and treated with 1% saporin to lyse interfering red blood cells. The remaining material was fixed in 10% neutral buffered formalin or glutaraldehyde and processed for light microscopy and scanning electron microscopy, respectively. Immunohistochemical staining was performed in some cases to confirm the presence of foam cells, smooth muscle cells and endothelial cells. A semiquantitative analysis of particulate bulk was performed. Particulate matter examined by scanning electron microscopy was measured in its major and minor access and the resultant two dimensional area calculated. This suspended particulate matter may play a role in the pathogenesis of distal emoblization, no-reflow, infarction, and morbidity and mortality following vein graft intervention.

Tables 1 and 2 below show the results of quantitative analyses performed on vein graft aspirates. Table 1 shows the frequency of acellular plaque material in vein graft aspirates. Table 2 shows the frequency of cellular plaque material in vein graft aspirates. Values are expressed as the frequency of positive samples per case. Numbers in parentheses represent the percentage of positive samples.

TABLE 1

Frequency of Acellular Plaque Material in Vein Graft Aspirates.

Samples	Necrotic Debris	Cholesterol Clefts	Collagen	Plaque Hemorrhage
PTCA	15/15 (100)	8/15 (23)	4/15 (27)	3/15 (20)
Stent 1	15/18 (83)	6/18 (33)	6/18 (33)	4/18 (22)
Stent 2	7/7 (100)	4/7 (57)	1/7 (14)	1/7 (14)

TABLE 2

Frequency of Cellular Plaque Material in Vein Graft Aspirates.

Samples	Foam Cells	Smooth Muscle Cells	Platelet Aggregates
PTCA	14/15 (93)	0/15 (0)	2/15 (13)
Stent 1	17/18 (94)	0/18 (0)	4/18 (22)
Stent 2	6/7 (86)	0/7 (57)	2/7 (29)

II. Inflatable Guidewire Apparatus

One preferred embodiment for a catheter for use in the preferred method is shown in FIG. **9**. In FIG. **9**, there is depicted a catheter **10** incorporating the low profile valve in a preferred aspect of the present invention. Although illustrated in the context of a simple occlusion balloon catheter, having a single inflation lumen and a single inflatable balloon, it is to be understood that the low profile valve can be readily adapted to a wide variety of balloon catheters, including those having additional functionalities, structures, or intended uses. For example, the low profile valve could be easily adapted to catheters having expandable members other than occlusion balloons, such as therapeutic dilatation balloons. Furthermore, the low profile valve may also be incorporated into catheters having two or more lumens. The manner of adapting the low profile valve to catheters having these various functionalities, structures, or intended uses will become readily apparent to those of skill in the art in view of the description which follows.

Catheter **10** generally comprises an elongate flexible tubular body **18** extending between a proximal control end **12** and a distal functional end **14**. Tubular body **18** has a central lumen **40** which extends between ends **12** and **14**. Lumen **40** has an opening **23** at proximal end **12**, and is sealed fluid tight at distal end **14**. The length of tubular body **18** may be varied considerably depending upon the desired application. For example, where catheter **10** is to be used as a guidewire for other catheters in a conventional percutaneous transluminal coronary angioplasty procedure involving femoral artery access, lengths of tubular body **18** in the range of from about 120 to about 300 centimeters are preferred, with a length of about 180 centimeters often being used. Alternately, for a different treatment procedure, not requiring as long a length of tubular body **18**, shorter lengths of tubular body **18** may be provided.

Typically, tubular body **18** will have a generally circular cross-sectional configuration with an outer diameter within the range of from about 0.010 inches to 0.044 inches. Optimally, in most applications where catheter **10** is to be used as a guidewire for other catheters, the outer diameter of tubular body **18** ranges from 0.010 inches to 0.038 inches, and preferably is 0.020 inches in diameter or smaller, more preferably 0.014 inches in outer diameter or smaller. The diameter of lumen **40** will be dictated, in part, by the outside diameter of tubular body **18**. For example, where tubular body **18** has an outer diameter of 0.014 inches, central lumen **40** may have an inner diameter of from about 0.008 inches to about 0.010 inches. The diameter of lumen **40** should be large enough to incorporate the low profile valve described below, and large enough to permit sufficient fluid passage for balloon inflation.

Noncircular cross-sectional configurations of lumen **40** can also be adapted for use with the low profile valve described in a preferred embodiment of the present invention. For example, triangular rectangular, oval, and other noncircular cross-sectional configurations are also easily incorporated for use with present invention, as will be appreciated by those of skill in the art. The manner of adapting the valve of the present invention will become readily apparent in view of the description which follows.

In the preferred embodiment, the tubular body **18** functions as a guidewire, and thus, tubular body **18** must have sufficient structural integrity, or "pushability," to permit catheter **10** to be advanced through vasculature to distal arterial locations without buckling or undesirable bending of tubular body **18**. It is also desirable for tubular body **18** to have the ability to transmit torque, such as in those embodiments where it may be desirable to rotate tubular body **18** after insertion into a patient. A variety of biocompatible materials, known by those of skill in the art to possess these properties and to be suitable for catheter manufacture, may be used to fashion tubular body **18**. For example, tubular body **18** may be made of stainless steel, or may be made of polymeric materials such as nylon, polyamide, polyimide, polyethylenes, or combinations thereof. In one preferred embodiment, the desired properties of structural integrity and torque transmission are achieved by forming tubular body **18** out of an alloy of titanium and nickel, commonly referred to as nitinol. In a more preferred embodiment, the nitinol alloy used to form tubular body **18** is comprised of about 50.8% nickel and the balance titanium, which is sold under the trade name Tinel (™) by Memry Corp. It has been found that a catheter tubular body having this composition of nickel and titanium exhibits great flexibility and improved kink resistance in comparison to other materials. One preferred embodiment of tubular body **18** is disclosed in our copending application entitled HOLLOW MEDICAL WIRES AND METHODS OF CONSTRUCTING SAME, application Ser. No. 08/812,876, filed on Mar. 6, 1997, now

U.S. Pat. No. 6,068,623 the entirety of which is incorporated herein by reference.

The distal end **14** of catheter **10** is provided with an atraumatic distal tip **16**, and an inflatable balloon **20**, as illustrated in FIG. **9**. Inflatable balloon **20** may be made from any of a variety of materials known by those of skill in the art to be suitable for balloon manufacture. For example, inflatable balloon **20** may be formed of materials having a compliant expansion profile, such as polyethylene or latex. In one preferred embodiment, where inflatable balloon **20** is to be used as an occlusion balloon, it is preferably formed of a block copolymer of styrene-ethylene-butylene-styrene (SEBS), sold under the trade name C-Flex (™). One preferred embodiment of a C-Flex occlusion balloon is disclosed in our copending application entitled BALLOON CATHETER AND METHOD OF MANUFACTURE, application Ser. No. 09/026,225, filed on Feb. 19, 1998, now U.S. Pat. No. 6,554,795 the entirety of which is incorporated herein by reference. Alternately, in those embodiments where inflatable balloon **20** is to serve as a dilatation balloon, it may be formed of materials having a noncompliant expansion profile, such as polyethylene terephthalate. Inflatable balloon **20** may be attached to tubular body **18** in any manner known to those of skill in the art, such as heat bonding or through use of adhesives.

As shown in FIG. **9**, catheter **10** is provided with a side-access inflation port or opening **22** formed in tubular body **18** at a point several centimeters distal from opening **23**. Inflation port **22** is in fluid communication with central lumen **40** extending through tubular body **18**. A fill hole (not shown) is formed in tubular body **18** within the region enclosed by inflatable balloon **20**, such that fluid passing through inflation port **22** and into lumen **40** may inflate balloon **20**. Conversely, an inflated balloon **20** can be deflated by withdrawal of fluid from balloon **20**, through lumen **40**, and out of side-access inflation port **22**.

The low profile valve may be used with catheters such as that described above, all well as with different catheters having different structures. In one preferred embodiment, the low profile valve comprises a sealing member which is movably positioned within the inner lumen of a catheter. The catheter has an inflation port, which, in some embodiments, is also an opening to the inner lumen at the proximal end of the catheter. An inflatable balloon is positioned on the distal end of the catheter, which is in fluid communication with the lumen and inflation port. The sealing member is inserted through the proximal opening into the lumen, with a portion of the sealing member extending outwardly from the proximal end of the catheter. The portion of the sealing member inserted into the lumen has a sealer portion which forms a fluid tight seal with the inner lumen to prevent fluid from passing past the sealer portion.

By application of a pushing or pulling force on the extending sealing member portion, the sealing member may be partially advanced within or withdrawn from the lumen, thereby moving the sealer portion within the lumen. In this manner, the sealer portion may be positioned within the lumen either proximally or distally of the inflation port. When the sealer portion is positioned proximally of the port, the valve is in the "open" position. When the valve is open, an unrestricted fluid pathway is established between the inflation port and the balloon, such that an external pressurized fluid source may be connected to the inflation port to inflate the balloon, or if the balloon is already inflated, the balloon may be deflated by application of a vacuum to the inflation port to withdraw fluid from the balloon. When the sealer portion is positioned distally of the inflation port, the valve is in the closed position, as the fluid tight seal between the lumen and the sealer portion prevents fluid from passing either to or from the balloon through the inflation port. Furthermore, when the valve is closed after balloon inflation, the fluid tight seal created by the sealer portion maintains the balloon in the inflated state in the absence of an external fluid source, by preventing the pressurized fluid within the balloon from escaping.

Referring to FIGS. **10**, **11**A and **11**B, there is depicted one embodiment of the low profile valve of the present invention, as used with the catheter of FIG. **9**. Catheter **10**, as described above, has a side-access inflation port **22** which is in fluid communication with central lumen **40**, and through which fluid may be introduced to inflate balloon **20**. Central lumen **40** has an opening **23** at proximal end **12**. A sealing member **30** is inserted into lumen **40** through opening **23**. Sealing member **30** may be partially advanced within or withdrawn from lumen **40** by the application of a longitudinal force on sealing member **30** directed toward or away from proximal end **12**, respectively.

Sealing member **30** comprises a main shaft **33**, a tapering region **31**, and a wire **32**. Sealing member **30** may be formed as solid piece out of suitable metals, such as stainless steel, nitinol and the like. For example, sealing member **30** may be formed as a solid cylindrical piece, and then be coined down at points along its length to form tapering region **31** and wire **32**. Alternately, one or more of the main shaft **33**, tapering region **31**, or wire **32** may be formed separately, and then attached to the other piece(s) by conventional means, such as soldering, to form sealing member **30**. Polymeric materials, such as Delron (™), nylon, and the like, may also be used to form sealing member **30**, either as a solid piece, or as separate pieces which are later joined to form the sealing member.

Although not required, in one preferred embodiment, main shaft **33** has an outer diameter no larger than the outer diameter of the catheter tubular body **18**. Thus, if the outer diameter of tubular body **18** is 0.014 inches, the diameter of main shaft **33**, and thus the largest diameter of sealing member **30**, is no larger than 0.014 inches. Furthermore, it is also preferred that main shaft **33** extend proximally from opening **23** by a distance of at least several centimeters to facilitate the application of longitudinal forces on main shaft **33** to manipulate the position of wire **32** in lumen **40**. Moreover, after catheter **10** has been fully inserted into a patient, an extending main shaft **33** advantageously functions much like a conventional guidewire extension, providing a starting point for the clinician to insert other catheters over main shaft **33** and catheter **10**.

The combined length of catheter **10** and extending main shaft **33** may be varied considerably at the point of manufacture, and may be adapted to the requirements of the other catheters which are to be used with catheter **10** and main shaft **33**. For example, where catheter **10** is to be used as a guidewire for other catheters in an "over-the-wire" embodiment, it is preferred that the total length of catheter **10** with extending main shaft **33** be about 300 centimeters. Alternately, when catheter **10** is to be used as a guidewire for other catheters in a single operator embodiment, or "RAPID-EXCHANGE" embodiment, it is preferred that the total length of catheter **10** with extending main shaft **33** be about 180 centimeters. As can be readily appreciated, the individual lengths of catheter **10** and extending main shaft **33** can be varied considerably and yet still achieve the overall desired combined length. For example, a catheter **10** having a length of 180 centimeters can be provided with an extending main shaft **33** having a length of 120 centimeters,

to achieve the 300 centimeter total desired length for over-the-wire embodiments.

In another embodiment, where it is undesirable to have a long main shaft extending proximally from catheter **10**, a main shaft extending proximally only several centimeters may be provided. The shorter main shaft may be provided with an attachment (not shown), which is adapted to releasably secure longer extensions to the main shaft, such that it can also be used to facilitate the use of catheter **10** as a guidewire for other catheters.

It is preferred that main shaft **33** have a larger diameter than the other portions of sealing member **30**, to make it easier to apply moving forces to sealing member **30**. Thus, a tapering region **31** may be disposed between main shaft **33** and wire **32**, to transition the outer diameter of sealing member **30** from the larger diameter of main shaft **33** to the smaller diameter of wire **32**. For the embodiment illustrated in FIGS. **9**–**11**B, it is wire **32** which is slidably inserted through opening **23** and into lumen **40**. Accordingly, the outer diameter of wire **32** must be less than the inner diameter of lumen **40**, so that wire **32** may be slidably accommodated therein. Moreover, in those embodiments where the end of wire **32** extends distally past inflation port **22** when the valve is in the open position, the gap between the outer diameter of wire **32** and the inner diameter of lumen **40** must be sufficiently large so as not to significantly restrict the flow of fluid passing through lumen **40** to or from inflation port **22**. Optimally, to facilitate the sliding of wire **32** within lumen **40** and to permit inflation fluid flow, wire **32** is from about 0.001 inches to about 0.004 inches smaller in outer diameter than the inner diameter of lumen **40**.

In a preferred embodiment, wire **32** and catheter **10** are provided with positive stops to prevent the withdrawal of wire **32** from the proximal end of catheter **10**. For the embodiment depicted in FIGS. **11**A and **11**B, this consists of a pair of cooperating annular rings mounted on wire **32** and lumen **40**, respectively. A first annular ring **34** is coaxially and fixedly mounted on wire **32** at a point on wire **32** contained within lumen **40**. A second corresponding fixed annular ring **35** projects inwardly from the interior surface of lumen **40** near proximal end **12**. The inner diameter of the opening of annular lumen ring **35** is slightly larger than the outer diameter of wire **32**, so as not to restrict the movement of wire **32** within lumen **40**. However, the outer diameter of annular wire ring **34** is greater than the inner diameter of the opening of ring **35**, such that rings **34** and **35** cooperate to prevent wire **32** from being withdrawn from the proximal end of catheter **10**.

Rings **34** and **35** may be formed of any material which may be attached to wire **32** and lumen **40**, respectively, and which possesses sufficient structural rigidity to act as a stop. Examples of suitable materials are metals and various hard polymers, such as stainless steel and Teflon (™). In one preferred embodiment, where wire **32** and tubular body **18** are both formed of nitinol, rings **34** and **35** are also formed of nitinol and are soldered to wire **32** and the inner surface of lumen **40**, respectively.

As will be appreciated by those of skill in the art, cooperating stopping structures other than those described herein may also be used to prevent full withdrawal of wire **32** from catheter **10**. For example, annular ring **34** may be replaced by one or more protrusions extending radially outwardly from wire **32**, which are also adapted to cooperate with ring **35** to prevent withdrawal of wire **32**. Alternately, annular ring **35** might be replaced by crimping tubular body **18** slightly to restrict movement of ring **34** to points proximal of the crimp.

A lumen sealer portion **36** is coaxially and fixedly mounted on wire **32**. Sealer portion **36** is positioned on wire **32** at a point distal to ring **34**, such that by partial withdrawal of wire **32** from catheter **10**, as depicted in FIG. **11**A, sealer portion **36** is capable of being positioned within lumen **40** at a point proximal to inflation port **22**. Sealer portion **36** is also located on wire **32** at a point such that when wire **32** is fully inserted into lumen **40**, as depicted in FIG. **11**B, sealer portion **36** either fully covers inflation port **22**, or is located within lumen **40** at a point distal to inflation port **22**. The leading edge **36***a* and trailing edge **36***b* of sealer portion **36** are preferably tapered, so that the edges of sealer portion **36** do not catch upon inflation port **22** when sealer portion **36** passes by port **22**.

It is preferred that sealer portion **36** form a fluid tight seal with the outer diameter of wire **32** and the inner diameter of lumen **40**, such that fluid in lumen **40** is prevented from flowing past sealer portion **36**. In the embodiment illustrated in FIGS. **11**A and **11**B, this is achieved by providing wire **32** with a sealer portion **36** that firmly contacts the entire inner circumference of a section of lumen **40** along a substantial portion of the length of sealer portion **36**. The fit between the outer surface of sealer portion **36** and the inner surface of lumen **40** is tight, such that a fluid tight seal is created which prevents fluid from passing past sealer portion **36**. However, sealer portion **36** must be capable of being moved within lumen **40** upon movement of main shaft **33**, tapering region **31**, and wire **32**. Thus, the fit between sealer portion **36** and lumen **40** must not be so tight as to prevent movement of sealer portion **36** in lumen **40** upon application of sufficient longitudinal force on main shaft **33**. Moreover, the fluid tight seal created by the fit between lumen **40** and sealer portion **36** must be maintained as sealer portion **36** is moved back and forth within lumen **40**.

Sealer portion **36** must also be capable of maintaining a seal at fluid pressures conventionally used to inflate catheter balloons, and should be capable of maintaining a seal at pressures which exceed conventional inflation pressures. Preferably, sealer portion **36** is capable of maintaining a seal at pressures up to about 10 atmospheres, more preferably pressures up to about 30 atmospheres, and most preferably at pressures up to about 60 atmospheres. Sealer portion **36** is also preferably capable of undergoing multiple valve-opening and valve-closing cycles without losing the structural integrity required to form seals capable of withstanding pressures of from about 10 atmospheres to about 60 atmospheres. Optimally, sealer portion **36** is capable of undergoing at least 10, and preferably at least 20, valve-opening and closing events and still be capable of maintaining a fluid tight seal at a pressure of 10 atmospheres.

In one embodiment, the desired properties of sealer portion **36** are attained by forming sealer portion **36** out of an extruded polymeric tubing. Pebax (™) tubing having an inner diameter of 0.008 inches and an outer diameter of 0.017 inches, and a hardness of 40 durometers, is first necked by heating the extruded tubing to a temperature of between 210 and 250 degrees Fahrenheit. Tube pieces of about 0.5 mm in length are then cut from the larger tubing. The cut Pebax (™) tubes are then placed on a nitinol wire having an outer diameter of about 0.006 inches, and are heated and shaped to recover a tube that has an outer diameter of between 0.010–0.011 inches. The adhesive Loctite 4014 (™) may then be used to bond the heat-shaped Pebax (™) tubing to the nitinol wire. When the adhesive dries, the leading and trailing edges of the bound Pebax (™) seal may be trimmed, leaving an annular lumen contact length of about 0.010 inches (0.25 mm). The wire bearing

the Pebax (™) sealer portion may then be inserted into the opening of a nitinol catheter having a lumen with an inner diameter of about 0.0096 inches. Sealer portions of this type have been observed to hold pressures of up to 30 atmospheres, and are capable of undergoing multiple valve-opening and closing events without significantly diminishing the seal strength.

As will be appreciated by those of skill in the art, different forms of Pebax (™) starting materials may be used to form sealer portion **36**. For example, in another preferred embodiment, similar steps were used with a Pebax (™) tube having similar dimensions but a hardness of 70 durometers, to create a sealer portion.

It is contemplated by the present inventors that methods and materials other than those described above may be used to make a lumen sealer portion having the desired properties. For example, materials other than Pebax (™), silicone, latex rubber, C-Flex (™), Nusil (™) and gels, which are known to possess adequate surface properties to function as a sealer portion, and also be lubricous enough to be moved within lumen **40**, may also be used to form sealer portion **36**. In addition, sealer portion **36** may be attached to wire **32** by alternate means, such as by integrally molding sealer portion **36** to wire **32**, dip forming sealer portion **36** to wire **32**, as well as other means of attaching a polymeric material to a wire known to those of skill in the art.

Other embodiments of sealer portion may not create a completely fluid tight seal between the sealer portion and the inner lumen at balloon inflation pressures. In these embodiments, however, the sealer portion creates a seal which prevents substantially all inflation fluid flow past the sealer portion, such that the inflatable occlusive device is maintained in an almost fully expanded state for extended periods of at least one minute, preferably 2 or more minutes, more preferably at least 10 minutes, and optimally at least 20 minutes or longer, and still be capable of providing clinically effective occlusion of any emboli particles in the blood vessel during this time period.

In a preferred embodiment, there is provided movement-force increasing structure, to increase the force required to move sealer portion **36** from the valve-closed to the valve-open position. Structure of this type advantageously minimizes the risk of an accidental opening of the valve, and subsequent balloon deflation, during a medical procedure. In the embodiment illustrated in FIGS. **11**A and **11**B, this is achieved by providing a biasing spring **37**, which surrounds wire **32** between stops **34** and **35**. Spring **37** exerts a force on stop **34**, pushing it, and thus wire **32** and sealer portion **36**, in the distal direction, so that sealer portion **36** forms a fluid tight seal by either covering port **22** or by being positioned within the lumen at a point distal to port **22**. Consequently, in the absence of a competing force, spring **37** maintains sealer portion **36** in the valve-closed position. Sealer portion **36** may be moved proximally to the valve-open position by application of a longitudinal force on main shaft **33** directed proximally from end **12** of sufficient magnitude to overcome the force of spring **37**. Optimally, spring **37** is selected so that the force that must be applied to main shaft **33** to overcome the force of spring **37** is from about 0.3 to about 1.0 pound-foot. In alternative embodiments, the movement force increasing structure may comprise waves introduced into the wire just proximal of the sealer portion, as described below, which also may require 0.3 to 1.0 pound-foot of force to overcome.

Referring to FIGS. **12** and **13**, there is illustrated in alternative embodiment of the valve of the present invention. The alternative embodiment comprises a catheter **110** which may have features which are substantially identical, in materials, structure, and function, as the catheter described in connection with FIGS. **9**–**11**B. Catheter **110** has a proximal end **112**, and a distal end (not shown) to which is mounted an expandable member, such as an inflatable balloon. A central lumen **140** extends within tubular body **118** between the proximal and distal ends. An opening **123** to lumen **140** is present at the proximal end **112** of catheter **110**.

A sealing member **130** is inserted into lumen **140** through opening **123**, as described previously. Sealing member **130** comprises a sealer portion **136**, a wire **132**, annular rings **134** and **135**, and support member **150**. Sealing member **130** may be formed out of materials and by methods as described previously.

As illustrated in FIGS. **12** and **13**, the outer diameter of wire **132** is less than the inner diameter of lumen **140**, such that sealing member **130** is slidably insertable into lumen **140**. Furthermore, a lumen sealer portion **136** is coaxially and fixedly mounted to wire **132** near the distal end of wire **132**. Sealer portion **136** forms a fluid tight seal with the outer diameter of wire **132** and the inner diameter of lumen **140**, such that fluid introduced into lumen **140** through opening **122** is prevented from flowing past sealer portion **136** at normal balloon inflation pressures of 1 to 3 atmospheres for occlusive devices, and as much at 10 atmospheres or more for other types of balloons. Sealer portion **136** may be provided with leading edge **136***a* and trailing edge **136***b*, both tapered, to facilitate movement of sealing portion **136** proximally and distally of inflation port **122**. Sealer portion **136** forms a fluid tight seal by firming contacting the entire inner circumference of a section of lumen **140** along a substantial portion of the length of sealer portion **136**. As described previously, sealer portion **136** prevents substantially all fluid flow past the seal created by sealer portion **136**, and the movement of sealer portion **136** proximally and distally of port **122** may be used to effect the valve-open and valve-closed positions.

Cooperating positive stops, consisting of hollow cylinders **134** and **135** are provided to prevent withdrawal of sealing member **130** from lumen **140**. Hollow cylinder **135** is attached to the inner surface of lumen **140** by adhesives, soldering, crimping, or by other means known to those of skill in the art, such that the proximal portion of hollow cylinder **135** extends within lumen **140**, and is secured therein, and the distal portion of cylinder **135** extends from proximal end **112**. Cylinder **135** has a lumen (not shown) extending therethrough. The diameter of the cylinder lumen is larger than the outer diameter of wire **132**, so that movement of wire **132** is not restricted. A second hollow cylinder **134**, preferably of shorter length, is placed over wire **132** and is fixedly mounted to wire **132**, by soldering, or other means, at a point distal to cylinder **135**. The outer diameter of cylinder **134** is less than the inner diameter of lumen **140**, so as not to restrict the movement of wire **132** within lumen **140**. However, the outer diameter of cylinder **134** is greater than the inner lumen diameter of cylinder **135**, so that cylinders **134** and **135** act as cooperating stops, to prevent wire **132** from being withdrawn from lumen **140**. Cylinders **134** and **135** may be formed of any material which may be attached to wire **132** and lumen **140**, respectively, and which possesses sufficient structural rigidity to act as a stop. Examples of suitable materials are metals and various hard polymers, such as stainless steel, Teflon (™), and the like. In one preferred embodiment, where wire **132** and tubular body **118** are both formed of nitinol, cylinders **134** and **135** are also formed of nitinol, and are soldered to wire **132** and the inner surface of lumen **140**, respectively.

The distal portion of cylinder **135** extending from proximal end **112** is inserted into support member **150**. Support member **150** comprises a tubular body **158** having an outer diameter and inner lumen diameter which are approximately the same as tubular body **118**. Consequently, because the outer diameter of cylinder **135** is less than the inner lumen diameter of support member **150**, the extending portion of cylinder **135** is slidably disposed within the support member **150** inner lumen.

Wire **132** extends proximally from cylinder **135** within support member **150**, as shown in FIGS. **12** and **13**. A segment of wire **132** within support member **150** is secured to support member **150** at point **152**. Wire **132** may be secured to support member **150** by any means known to those of skill in the art, including use of adhesives, crimping, soldering or welding. Because wire **132** is secured to support member **150**, the application of longitudinal forces on support member **150** results in movement of sealing member **130** within lumen **140**, to open or close the valve, as described above with respect to FIGS. **9–11**B. Advantageously, use of support member **150** protects wire **132** from undesirable kinking or bending when sealing member **130** is moved.

As illustrated in FIGS. **12** and **13**, sealing member **130** has movement-force increasing structure which increases the force required to move sealing member **130** within lumen **140**. The movement-force increasing structure consists of waves **138** formed in wire **132** just proximal to sealer portion **136**. Waves **138** contact the inner surface of lumen **140**, thereby increasing the frictional forces which must be overcome to move wire **132** within lumen **140**. In one preferred embodiment, where wire **132** is made of nitinol and has an outer diameter of 0.006 inches, and is inserted into a nitinol catheter which has an inner lumen **140** with the diameter of about 0.010 inches, waves are formed on wire **132** for one and one-half cycles with an amplitude of about 0.016 inches to increase the valve-opening movement force.

Referring to FIGS. **14** and **15**, there is illustrated another embodiment of the present invention. Referring to FIG. **14**, there is provided a catheter **400** having a tubular body **418** and inflatable balloon (not shown) as described above. Catheter **400** may be formed of materials and methods as described above, and may have structural aspects identical to those described previously, except where otherwise noted. In particular, as shown in FIGS. **14** and **15**, catheter **400** is not provided with a side-access port on the catheter tubular body, nor is there provided cooperating positive stops on the wire and lumen. Instead, the sealer portion may be fully withdrawn from the lumen. Once the sealer portion is removed, the proximal opening serves as an access port for attached devices to inflate or deflate the balloon. The sealer portion can be inserted through the proximal opening into the lumen after balloon inflation to maintain the balloon in the inflated state.

Catheter **400** has a proximal end **412**, and a distal end (not shown) to which is mounted an inflatable balloon. A central lumen **440** extends within tubular body **418** between the proximal and distal ends. An opening **423** to lumen **440** is present at the proximal end **412** of catheter **400**.

A sealing member **430** is inserted into lumen **440** through opening **423**. Sealing member **430** has a main shaft **433**, a tapering region **431**, and a wire **432**. Sealing member **430** may be formed of materials and by methods as described previously. As illustrated in FIGS. **14** and **15**, the outer diameter of main shaft **433** is less than the inner diameter of lumen **440**, such that main shaft **433** is slidably insertable into lumen **440**. In addition, the outer diameters of tapering region **431** and wire **432** are also smaller than main shaft **433**, and thus lumen **440**, such that tapering region **431** and wire **432** are also slidably insertable in lumen **440**. A portion of main shaft **433** preferably extends proximally from end **412**, to facilitate application of moving forces upon sealing member **430** to move wire **432** within lumen **440**, as described previously.

As illustrated in FIGS. **14** and **15**, sealing member **430** has movement-force increasing structure which increases the force required to move sealing member **430** within lumen **440**. The movement-force increasing structure consists of waves **438***a* and **438***b* formed in wire **432** near its distal end. Waves **438***a* and **438***b* contact the inner surface of lumen **440**, thereby increasing the frictional force which must be overcome to move wire **432** within lumen **440**. In one preferred embodiment, where wire **432** is made of nitinol and has an outer diameter of 0.006 inches, and is inserted into a nitinol catheter which has an inner lumen **440** with a diameter of about 0.010 inches, waves are formed on wire **432** for 1½ cycles with an amplitude of about 0.016 inches to increase the valve-opening movement force.

A lumen sealer portion **436** is coaxially and fixedly mounted on wire **432**. Sealer portion **436** forms a fluid tight seal with the outer diameter of wire **432** and the inner diameter of lumen **440**, such that fluid introduced into lumen **440** through opening **423** is prevented from flowing past sealer portion **436** when sealer portion **436** is inserted into lumen **440**. Sealer portion **436** forms the fluid tight seal by firmly contacting the entire inner circumference of a section of lumen **440** along a substantial portion of the length of sealer portion **436**, and may be formed of materials and by methods as previously described.

In some removable sealing member embodiments, the sealing member is not provided with a separate sealing portion, as described above. In these embodiments, the sealing member itself functions as a sealing portion which is inserted into the proximal opening to restrict fluid flow, and which may be partially or wholly removed to provide for a fluid pathway between the proximal opening and an expandable member on the distal end of the catheter. Preferably, the sealing members of these embodiments comprise a tapering rod, which at its distal end, has an outer diameter smaller than the inner lumen diameter of the catheter in which it is inserted as a plug, such that the distal end of the rod may be easily inserted into the catheter lumen through the proximal opening. The tapering rod increases in outside diameter at points proximal to the distal end. Consequently, one or more points of the rod have an outside diameter greater than the inner lumen diameter of the catheter in which it is inserted as a plug, such that by forcing the rod into proximal opening, the larger outer diameter of the rod forms a relatively fluid tight seal with the catheter lumen at the proximal opening of the catheter. An O-ring, or other polymeric structure, may be mounted in the inner lumen of the catheter at or near the proximal opening, to cooperate with the tapering rod in the creation of the seal. Thus, in this embodiment, the point where the seal is created does not move with respect to the catheter, but is instead stationary at or near the proximal opening of the catheter.

Referring to FIG. **20**, there is depicted an alternative embodiment of the valve the present invention. The alternative embodiment is provided to a catheter **500**, formed of a tubular body **518** and having a proximal end **512**. Catheter **500** has an opening **523** at is proximal end, and a lumen **540** extending the length of the tubular body. Lumen **540** is in fluid communication with an expandable member (not shown) mounted on the distal end of tubular body **518**. A

side-access port **522** is provided in tubular body **518** at a point distal to proximal end **512**. Catheter **500** may have aspects identical, both in structure, dimensions, materials, and construction, to catheters described previously.

A sealing member **550** is positioned within lumen **540** near proximal opening **523** and side-access port **522**. Sealing member **550** is formed from a short tubular body **568**, having a lumen **590**, which is sealed at end **562**, but open at the other end. Sealing member **550** has an outer diameter slightly larger that the inner diameter of lumen **540**, but smaller than the outer diameter of tubular body **518**, such that sealing member **550** may be tightly fit within lumen **540** through opening **523**, to form a fluid tight seal over catheter proximal opening **523**. Cooperating stopping structures (not shown) may be provided to sealing member **550** and catheter **500** to prevent removal of sealing member **550** from lumen **540** at elevated pressures. Sealing member **550** may be formed out of the same materials as tubular body **518**.

Tubular body **568** is provided with an opening **572** extending therethrough. Opening **572** is positioned on tubular body **568** such that opening **572** is capable of aligning with side-access port **522** when sealing member **550** is rotated within lumen **540**, or is moved proximally or distally within lumen **540**. A rotation element **595**, such as a perpendicular attachment, may be provided facilitate rotation of sealing member **550** within lumen **540**. Other rotation elements, such as notches or grooves, may be used in place of the perpendicular attachment, as will be appreciated by those of skill in the art.

Sealing member **550** functions as a valve within catheter **500**, controlling fluid flow through side-access port **522**. When sealing member **550** is rotated so that port **522** and opening **572** are aligned, fluid may flow through port **522** through lumen **540** to inflate the occlusive device. Upon the desired inflation, sealing member **550** may be rotated, as for example by ninety degrees, or moved proximally or distally within lumen **540**, such that opening **572** is no longer aligned with port **522**, and tubular body **568** blocks fluid flow through port **522**.

Shown in FIG. **21**, is an alternative embodiment of the rotatable sealing member. Numerals corresponding to those of the embodiment of FIG. **20** have been used to illustrate the similar structural aspects between the two embodiments. Sealing member **650** is identical in construction to the sealing member of FIG. **20**, except that sealing member **650** is somewhat larger, and is adapted to be slipped over tubular body **618**. The respective diameters of tubular body **618** and sealing member lumen **690** are such that a fluid tight seal is created over lumen **623**. Side-access inflation port **622** may be aligned with opening **672**, as above, by rotation or longitudinal movement, to provide fluid access to lumen **640** through port **622**.

In certain embodiments, it may be desirable for sealing members **550** and **650** to have a longer length, such that they may function as an extension for other catheters to be inserted over catheters **500** and **600**. In these embodiments, sealing members **550** and **650** may be formed with longer tubular bodies, or be provided with attachments so that extension members may be releasably secured thereto.

Referring to FIGS. **22**, **23**A and **23**B, there is illustrated an alternative embodiment of the present invention featuring a self-closing valve. The alternative embodiment comprises a catheter **700** having an elongate flexible tubular body **718** extending between a proximal control end **712** and a distal functional end (not shown), and having a balloon (not shown) as described previously. Tubular body **718** has central lumen **740** which extends between the proximal and distal ends. Lumen **740** has an opening **723** at proximal end **712**, and is sealed fluid tight at the distal end. A side access inflation port **722** is formed in tubular body **718** at a point distal of opening **723**. Inflation port **722** and lumen **740** are in fluid communication with the distal inflatable balloon, as described previously.

A wire **732** is inserted into opening **723**, and is slidably disposed within lumen **740**. Accordingly, the outer diameter of the wire **732** must be less than the inner diameter of lumen **740**, so that wire **732** may be slidably accommodated therein. A sealer portion **736** is coaxially mounted on wire **732**. Sealer portion **736** is of similar type and construction to the sealer portion described in connection with FIGS. **9**–**11**B. Sealer portion **736** is positioned on wire **732** at a point distal to inflation port **722**, and forms fluid-tight seal with the outer diameter of wire **732** and the inner diameter of lumen **740**, such that fluid introduced into lumen **740** is prevented from flowing past sealer portion **736**. Consequently, because sealer portion **736** is positioned with lumen **740** distal to inflation port **722**, sealer portion **736** is in the valve-closed position.

In the embodiment depicted in FIGS. **22**–**23**B, tubular body **718** is formed from a material having a certain degree of elasticity, such that if the proximal end **712** of tubular body **718** is secured to wire **732** at point **750**, and a longitudinal force is applied to tubular body **718** in a direction distal to end **712**, the elasticity of tubular body **718** results in the shifting of inflation port **722** in the distal direction. Moreover, slits **711** may be formed in tubular body **718** near proximal end **712** to enhance the elastic response of tubular body **718**, thereby increasing the distal translocation of inflation port **722** upon application of an axial force to tubular body **718**. Wire **732** may be secured to tubular body **718** by any means known to those of skill in the art, such as adhesives, welding, soldering, or crimping.

In a preferred embodiment, tubular body **718** is made out of nitinol, and has at least 8% elasticity when longitudinal slits **711** are introduced at the proximal end. As can be observed in FIG. **23**A, in the absence of any longitudinal force applied to tubular body **718**, sealer portion **736** is positioned within lumen **740** at a point distal to inflation port **722**, such that fluid may not pass through port **722** to inflate or deflate the balloon. However, if a longitudinal force is applied to tubular body **718** in the distal direction, and the proximal end of tubular body **718** and wire **732** are held in position, tubular body will stretch, as shown in FIG. **23**B, and inflation port **722** will be translocated in the distal direction so that sealer portion **736** will be located within the lumen proximally of port **722**. This will establish an unrestricted fluid pathway between inflation port **722** and the distal balloon, so that the balloon may be either inflated or deflated by passage of fluid through port **722**. Upon removal of the longitudinal force, the elastic response of tubular body **718** will result in proximal translocation of inflation port **722**, and sealer portion **736** will once again be in the valve-closed position.

Referring to FIGS. **16** and **17**A, there is illustrated an inflation adaptor **200** which may be used to inflate and to open and close the low profile valve depicted in FIGS. **9**–**13**. Inflation adaptor **200** comprises a housing having a first half **202** and a second half **204**, which are preferably formed of metal, medical grade polycarbonate, or the like. Halves **202** and **204** are attached to one another by a pair of hinges **205** positioned on one of the lateral edges of each half, such that halves **202** and **204** may be separated or joined in a clam shell manner as depicted in FIGS. **16** and **17**. A locking clip **230** secures half **202** to half **204** while inflation adaptor **200**

is in use. Locking clip **230** may be provided with an angled leading edge **235** to facilitate closing of clip **230** to secure halves **202** and **204** together. Springs **209** may also be provided to facilitate opening of adaptor **200**.

A groove **240** separates first half **202** from second half **204** when the halves are closed and clip **230** is secured. Groove **240** is of sufficient width to accept the proximal end of a catheter having the low profile valve, as described in detail above. A fitting **210** is positioned on half **202**, to create an inflation passageway **212** which terminates in opening **285** on the interior surface of first half **202**. Fitting **210** is preferably a standard luer connector which may be attached to a variety of existing external pressurized fluid sources, although other types of fittings, such as tubings, quick connects, and Y-site connections, may be easily substituted for a luer fitting.

A seal comprising a pair of gaskets **280** is positioned around opening **285** on the interior surfaces of halves **202** and **204**. Gaskets **280** are in alignment, such that when halves **202** and **204** are brought together and secured by locking clip **230**, a fluid tight inflation chamber is created within the interior region defined by gaskets **280**. The fluid tight inflation chamber is in fluid communication with fitting **210** via inflation passageway **212**, so that a pressurized inflation fluid may be introduced into the fluid tight inflation chamber by attaching an external pressurized fluid source to fitting **210**. Moreover, gaskets **280** are preferably formed of resilient materials, such as silicone, C-Flex (™) and Pebax (™), so that gaskets **280** may form-fit over a catheter tubular body which extends across the lateral edges of gaskets **280**, to create the fluid tight chamber.

An actuator **220** is positioned on the external surface of half **202**. In the embodiment illustrated in FIGS. **16** and **17**, actuator **220** controls a cam which operates a sliding panel **283** on the interior surface of half **202**. Sliding panel **283** moves back and forth along a line which bisects opening **285**. When actuator **220** is moved to a first position, sliding panel **283** moves toward opening **285** along this line. When actuator **220** is moved to a second position, sliding panel **283** moves away from opening **285** along the same line. A corresponding sliding panel **284** is positioned on half **204**, such that panels **283** and **284** are aligned and move together when the position of actuator **220** is changed. To facilitate coordinated movement of panels **283** and **284**, a pin **286**, or such other similar engagement structure, may be provided to releasably secure panel **283** to panel **284** when the adaptor is closed. The length of travel of panels **283** and **284** is preferably adjusted to provide the minimum sufficient distance to position the sealing member in the valve open or valve closed position, as desired.

Panels **283** and **284** each have a roughened surface **290**, to facilitate the frictional engagement of panels **283** and **284** with the main shaft portion of the low profile valve. In a preferred embodiment, panels **283** and **284** are both made of silicone, and roughened surface **290** comprises teeth **291** and grooves **292** formed on each of panels **283** and **284**. The teeth **291** and grooves **292** cooperate, to permit the teeth of one panel to fit into the grooves of the opposite panel when the adaptor is closed.

For ease of understanding, the operation of inflation adaptor **200** to inflate the balloon of the catheter of FIGS. **9–11**B will now be described. Actuator **220** is moved to the first position, so that sliding panels **283** and **284** are moved closer to opening **285**. Locking clip **230** is then undone, exposing groove **240**. Halves **202** and **204** are then partially separated, and catheter **10**, with the balloon **20** deflated, is inserted into the inflation adaptor. As described previously, catheter **10** has an inflation port **22** located near proximal end **12**, and a main shaft **33** extending from proximal end **12**. Catheter **10**, with the low profile valve in the closed position, is placed within groove **240** of partially open adaptor **200**, and catheter **10** and main shaft **33** are placed within securing clips **271** and **272**, such that when halves **202** and **204** are closed, inflation port **22** will lie within the fluid tight inflation chamber created by gaskets **280**, and the extending portion of main shaft **33**, but not proximal end **12**, will rest between sliding panels **283** and **284**. An alignment slot **298** and overlying shelf **299** may be provided to facilitate alignment and prevent buckling or kinking of the catheter and sealing member during use.

As shown in FIG. **17**B, in one embodiment, indicia **260** are provided on catheter **10** and main shaft **33**, which when aligned with indicia **270** on inflation adaptor **200**, result in alignment of inflation port **22** with the fluid tight inflation chamber of adaptor **200**, and alignment of main shaft **33** with sliding panels **283** and **284**, when catheter **10** and sealing member **30** are inserted into groove **240**. Indicia **260** and **270** may take the form of markings, grooves or notches, or any other suitable means of aligning the valve with the inflation adaptor alignment indicia, may be provided. Preferably, the gap between indicia **260** on catheter **10** and main shaft **33** is approximately equal to the space between clips **271** and **272**, such that by placing indicia **260** within clips **271** and **272**, catheter **10** and main shaft **33** are properly aligned within adaptor **200**.

Indicia solely on the catheter tubular body may also be used to facilitate correct alignment. For example, two visible markings may be place on the catheter on either side of the catheter inflation access port. By inserting the catheter into lower half **204** so that both of these markings are place within lower half gasket **280**, the catheter inflation access port will be within the fluid tight inflation chamber created by gaskets **280** when halves **202** and **204** are secured to one another.

Once main shaft **33** and inflation port **22** are properly aligned within adaptor **200**, locking clip **230** is secured. Inflation port **22** now lies within the fluid tight inflation chamber created by gaskets **280**, and main shaft **33** rests between sliding panels **283** and **284**. The clinician may then attach an external pressurized fluid source to fitting **210**.

To inflate balloon **20**, the clinician moves actuator **220** from the first position to the second position, thereby causing sliding panels **283** and **284** to move away from opening **285**. Because main shaft **33** is firmly secured between panels **283** and **284**, a longitudinal force directed away from proximal end **12** is applied to main shaft **33**. The longitudinal force on main shaft **33** results in wire **32** being partially withdrawn from lumen **40**, which causes sealer portion **36** on wire **32** to be moved to a position within lumen **40** which is proximal of inflation port **22**. The movement of sealer portion **36** proximally of inflation port **22** opens the low profile valve, by establishing an unrestricted fluid pathway between inflation port **22** and balloon **20**.

The external pressurized fluid source may then be activated, as for example by pushing the plunger on a syringe, such that pressurized fluid passes through passageway **212** and opening **285** into the fluid tight inflation chamber. The pressurized fluid then passes through inflation port **22** and lumen **40**, to inflate balloon **20**.

Inflated balloon **20** may be maintained in the inflated state, in the absence of the pressurized fluid source, by closing the low profile valve. This is accomplished by moving actuator **220** back to the first position, thereby causing sliding panels **283** and **284** to move toward opening

285. The moving panels apply a longitudinal force, directed toward proximal end **12** to main shaft **33**, causing wire **32** to be further inserted into lumen **40**. Consequently, sealer portion **36** is moved from a position within lumen **40** which is proximal to inflation port **22** to a position in lumen **40** which is distal to inflation port **22**. The fluid tight seal created by sealer portion **36** traps the pressurized fluid within lumen **40** and balloon **20**, thereby maintaining balloon **20** in the inflated state. The external pressurized fluid source may then be deactivated and removed. Once the low profile valve is closed, inflation adaptor **200** may be removed by unlocking clip **230**, and removing catheter **10** and main shaft **33** from groove **240**.

Referring to FIGS. **18** and **19**, there is illustrated an alternative embodiment of an inflation adaptor especially adapted for manipulating removable low profile valves, although it may be used with side-access embodiments as well.

Moreover, it should also be appreciated that adaptor **200** and similar type adaptors may also be used to manipulate removable valve embodiments.

Adaptor **300** comprises an outer sleeve **320** formed of metal, medical grade polycarbonate, or similar such materials. Outer sleeve **300** defines a tapering inner lumen **350**. Lumen **350** tapers from large diameter **352** which is significantly greater than the outer diameter of the catheter tubular bodies inserted into lumen **350**, to a smaller diameter **355**, which is slightly larger the outer diameter of the catheter tubular body. Lumen **350** is in fluid communication with an inflation passageway **312** formed by fitting **310**, so that a pressurized inflation fluid may be introduced into lumen **350**. Releasable seals **315** are positioned at each end of lumen **350**, such as to create a fluid tight inflation chamber within lumen **350** when a pressurized fluid source is attached. Releasable seals **350** may comprise any type of seal known to those of skill in the are, such as Toughy Borst connectors, hemostatic valves, and the like. Releasable seals **350** may also act to secure any catheters and sealing members inserted within the releasable seal openings **325**

In use, a catheter and sealing member, such as that described in connection with FIGS. **14–15**, is inserted into opening **325** after seals **315** have been opened. The catheter and sealing member are positioned under passageway **312**, and the sealing member is removed from the proximal opening of the catheter. A fluid passageway is thereby created between the proximal catheter opening and the expandable member of the distal end of the catheter. Seals **350** are closed to create a fluid tight chamber, and a vacuum and/or pressurized inflation fluid is applied, to inflate or deflate the balloon. After the desired inflation or deflation has occurred, the sealing member may be introduced into the proximal opening of the catheter tubular body to seal the lumen, either by hand or by a movable actuator (not shown). Seals **350** may then be loosened, and the end access adaptor **300** removed by sliding the adaptor off the end of the catheter and sealing member.

Referring to FIGS. **24–26**B, there is illustrated an alternative embodiment inflation adaptor **800** which may also be used in conjunction with the low profile valves of the present invention, of the type depicted in FIGS. **9–13**, to inflate or deflate catheter balloons. Inflation adaptor **800** comprises a housing having a first half **802** and a second half **804**, which are preferably formed of a medical grade polycarbonate. However, as will be appreciated by those of skill in the art, a great many other materials may by used to form adaptor **800**, including metals such as 300 series stainless steel and 400 series stainless steel, and polymeric materials such as Acrylonitrile-butadiene-styrene (ABS), Acrylics, and Styrene-acrylonitriles. Furthermore, the individual halves **802** and **804** may be manufactured in a variety of different ways. For example, where polymeric materials are used, it is preferable to use a mold to manufacture each of the halves. Moreover, in some embodiments, more than one molded piece may be used to form an individual half, with the various pieces being joined together by bonding or mechanical means to form a half. Alternately, as is known in the art, the individual halves can be formed through machining processes performed on larger blocks of the raw materials.

Halves **802** and **804** are attached to one another by hinges **806** positioned on one of the lateral edges of each half, through which a joining pin **805** is inserted, such that halves **802** and **804** may be opened or closed in a clam shell manner as depicted in FIGS. **24** and **25**. Preferably, the cross-sectional angle formed by halves **802** and **804** in the open position, as shown in FIG. **25**, is 90° or greater, and more preferably from 120°–180°, to facilitate insertion of a catheter into adaptor **800**.

As shown in FIGS. **24** and **25**, a plate **832** is secured to the front portion of housing half **804** by three screws **833**. Plate **832** is provided with two or more pin receptacles **834**. A cam latch **830** is mounted on plate **832** and is secured thereto by pin **831** which runs through pin receptacles **834** and a corresponding cam latch pin receptacles **836**, to form a hinge between cam latch **830** and plate **832**. Cam latch **830** and plate **832** may be made from any of the same variety of materials as housing halves **802** and **804**, and for any particular embodiment, are preferably made of identical materials, although combinations of materials may also be used. Also, as is appreciated by those of skill in the art, the corresponding hinge structure provided by plate **832** and cam latch **830** may also be achieved by many other methods. For example, plate **832** may be integrally molded with housing half **804** at the time of manufacture as a single piece, thereby eliminating the need for screws **833**, but with cam latch **830** mounted thereon as described above.

Cam latch **830** is designed to secure halves **802** and **804** together when adaptor **800** is in use, to assist in the creation of an the inflation seal as described above. Advantageously, by placing cam latch on half **804** as shown, the adaptor interior is more accessible to the clinician during a procedure, and it is easier for the clinician to insert catheters into adaptor **800**. Cam latch **830** also serves the important function of preventing accidental opening of the adaptor **800** during use. An important feature of cam latch **830** is the manner in which it cooperates with housing half **802** to create a releasable locking mechanism which applies great force to halves **802** and **804** upon closing, while at the same time using the principles of mechanical advantage to minimize the force the user must exert to close cam latch **830**. This is achieved by providing latch **830** with a cammed surface **838** and also providing the front edge of housing half **802** with a rounded lip **837** to accept cammed surface **838**, as shown in cross-sectional schematic form in FIGS. **27**A–**27**C.

Referring to FIG. **27**A, halves **802** and **804** have been brought together, with cam latch **830** in its open position. As cam latch **830** begins to be closed, as shown in FIG. **27**B, cammed surface **838** contacts rounded lip **837** and exerts a closing force thereon. Upon further closing, and to the fully closed position shown in FIG. **27**C, cam latch **830** acts as a lever, with the closing force between cammed surface **838** and lip **837** being a function of the force of exerted by the

user, the length of the lever (length of cam latch door), and the height of the cam surface, as defined by the following well known mathematical equation:

$$F_u = F_c \frac{H}{L}$$

F_u = User applied force
F_c = Closing force
L = length of lever (width of door)
H = height of can

However, as can be appreciated, because the lever length, which in the adaptor embodiment is the length of cam latch **830** in its closing direction, is much greater than the height of the cam created by surface **838** and lip **837**, the closing force exerted is always greater than the force the user exerts on cam latch **830**. Thus, very tight seals may easily be created by the clinician when the device is used.

Cam latch **830** is also preferably provided with a shelf **835** to secure halves **802** and **804** together. Shelf **835** is positioned on latch **830** at a point such that when latch **830** is in its closed position, shelf **835** firmly contacts housing half **802** along the side bearing hinges **806**. Preferably, shelf **835** has an angled leading edge to facilitate closing of latch **830**.

A gap **840** separates first half **802** from second half **804** when the halves are closed and latch **830** is secured. Gap **840** is of sufficient width to accept the proximal end of a catheter having the low profile valve, as described in detail above, without crimping the catheter to impair its function. A fitting **810** is positioned on half **802**, to create an inflation passageway **812** which terminates in opening **885** on the interior surface of first half **802**. Fitting **810** is preferably a standard luer connector which may be attached to a variety of existing external pressurized fluid sources, although other types of fittings, such as tubings, quick connects, and Y-site connections, may be easily substituted for a luer fitting.

A seal comprising a pair of gaskets **880** is positioned around opening **885** on the interior surfaces of halves **802** and **804**. Gaskets **880** are in alignment, such that when halves **802** and **804** are brought together and secured by cam latch **830**, a fluid tight inflation chamber is created within the interior region defined by gaskets **880**. The fluid tight inflation chamber is in fluid communication with fitting **810** via inflation passageway **812**, so that a pressurized inflation fluid may be introduced into the fluid tight inflation chamber by attaching an external pressurized fluid source to fitting **810**. Gaskets **880** are preferably formed of resilient materials, such as silicone, C-Flex (™) and Pebax (™) or Kraton (™), silicone, and other elastomeric materials, so that gaskets **880** may form-fit over a catheter tubular body which extends across the lateral edges of gaskets **880**, to create the fluid tight chamber.

An actuator **820** is positioned on the external surface of half **802**. In the embodiment illustrated in FIGS. **24–26**B, actuator **820** is a rotatable knob controlling a cam which operates a sliding panel **883** on the interior surface of half **802**. As will be appreciated by those of skill in the art, however, a great many different actuating structures other than rotatable knobs and sliding panels may be used to achieve the movement of the catheter sealing members described herein. Furthermore, where catheter valves require rotational movement, such as those of FIGS. **20** and **21**, rotational actuating mechanisms may be provided as well.

Sliding panel **883** moves back and forth along a line which bisects opening **885**. When actuator **820** is moved to a first position, shown in FIG. **26**A, sliding panel **883** moves away from opening **885** along this line. When actuator **820** is moved to a second position, as shown in FIG. **26**B, sliding panel **883** moves toward opening **885** along the same line. A corresponding sliding panel **884** is positioned on half **804**, such that panels **883** and **884** are aligned and move together when halves **802** and **804** are closed and the position of actuator **820** is changed.

In actual clinical practice, the movement of panels **883** and **884** results in the opening and closing of a catheter valve placed within adaptor **800**. When actuator **820** is moved to the position shown in FIG. **26**A, panels **883** and **884** move away from opening **885**. This would result in the opening of the valve described in connection with FIGS. **9–13**, as the sealer portion of the valve would be positioned proximally of the access port to establish a fluid pathway between the access port and the inflatable balloon at the distal end of the catheter. Conversely, when actuator **820** is moved to the position shown in FIG. **26**B, panels **883** and **884** move toward opening **885**. This would result in the closing of the valve, as the sealer portion of the valve would be positioned distally of the access port, thereby preventing substantially all fluid flow between the access port and those portions of the catheter distal to the sealer portion. Preferably, detents (not shown) are provided on the actuator camming mechanism to provide the user with tactile and audible feedback when the panels are nearest or farthest from opening **885** (i.e., catheter valve is closed or open, respectively).

Adaptor **800** is also preferably provided with a safety lock, to prevent accidental opening when the adaptor is being used and the catheter valve is open. As shown in FIGS. **26**A and **26**B, this may be achieved by providing an extending flanged portion **822** to actuator knob **820**. When actuator knob **820** is in the valve open position, as shown in FIG. **26**A, extending flange **822** extends over latch **830**, preventing the latch from being opened. In the valve closed position, as shown in FIG. **26**B, flange **821** is rotated away from latch **830**, which may then be opened.

Panels **883** and **884** each have a roughened surface **890**, to facilitate the frictional engagement of panels **883** and **884** and their coordinated travel with the moving portions of the low profile valve. Panels **883** and **884** may be made from any of a variety of polymeric or metallic materials, but must possess sufficient frictional force to engage and move the catheter sealing member without slippage. Consequently, depending on the type of catheter used, those of skill in the art may desire to select different materials for panels **883** and **884** to maximize the frictional forces between the panels and their intended use catheter. In a preferred embodiment, in which panels **883** and **884** are to engage a catheter sealing member made from stainless steel, panels **883** and **884** are both made of Kraton 90A (™), and roughened surface **890** comprises teeth **891** and grooves **892** formed on each of panels **883** and **884**. The teeth **891** and grooves **892** cooperate, to permit the teeth of one panel to fit into the grooves of the opposite panel when the adaptor is closed. Furthermore, alternative cooperating structure, such as dimples and ridges, may also be used to coordinate travel of panels **883** and **884**.

One problem that has been recognized with low profile valves is the phenomenon of plug walk-out. That is, after the valve has been placed in its closed position, with the sealer portion of the sealing member distal to the inflation access port, and the adaptor removed, the internal forces on the sealing member tend to cause very small portions of the sealing member to be pushed out of the catheter proximal end. Plug walk out is undesirable as it has an adverse impact

on the ability of the sealed catheter to act as a guidewire for other devices. It has been found, however, the plug walk out can be minimized or eliminated if the sealing member is initially "overdriven", or forced slightly further in the catheter, during the sealing step.

Advantageously, adaptor **800** is provided with an overdrive system to overdrive a sealing member into a catheter. Referring to FIG. **25**, panel **884** travels back and forth within housing recess **894** along a which bisects opening **885**, as described above. A spring **809** is mounted in recess **894** and is attached to the wall of recess **894** and panel **884**. Spring **809** is biased so as to push panel **884** toward opening **885**, and forces panel **884** against the wall of recess **894** which is opposite to that which spring **809** is attached.

Referring to FIGS. **28**A–**28**C, there is shown the top portion of half **802** containing panel **883**. Panel **883** resides in housing recess **893**, and travels back and forth along a line which bisects opening **885**, as described above. The movement of panel **883** is controlled by actuator **820**, as described above. An expanded spring **888** is attached to panel **883**, as shown in FIGS. **28**A–**28**C. Spring **888** has a strength which exceeds that of lower spring **809**. In the adaptor open position, as shown in FIG. **25**, expanded spring **888** contacts the wall of recess **893**, and pushes panel **883** away from the recess wall to create an overdrive gap **886**, as shown in FIG. **28**A.

When a catheter with a valve in a closed position is loaded into half **804**, and halves **802** and **804** are closed and latched, the teeth **891** of panel **883** contact the grooves of panel **884**. The superior spring force of spring **888** then forces spring **809** to compress a small amount, such that panel **884** no longer is forced against the recess wall, and now has an overdrive gap (not shown) approximately equal to overdrive gap **886**. The actuator may then be engaged to drive panels **883** and **884** away from opening **885** toward recess walls **893***a* and **894***a*, respectively, thereby opening the valve mechanism. The inflatable balloon on the catheter may then be inflated as described above.

Upon closure of the valve, by rotating actuator **820** in the opposite direction, panels **883** and **884** are moved toward opening **885** until the sealer portion of the sealing member is distal to the catheter inflation access port. Overdrive of the sealing member is then achieved when actuator **820** is adjusted so that panels **883** and **884** are forced against recess walls **893***b* and **894***b*, as shown for panel **883** in FIG. **28**C. That is, the force of actuator **820** overcomes the force of spring **888**, and drives the sealing member into the catheter by a distance farther than it initially resided before the valve was opened, the distance being approximately equal to the width of gap **886**. It has been found that by overdriving the sealing member to a closed position further than its initial closed position compensates for plug walk-out. Preferably, the sealing member is overdriven by a distance of about 0.020 inches.

Alternative overdrive mechanisms may be used for other adaptor embodiments. For example, rather than mounting spring **888** on panel **883**, the spring might be mounted in a slot wall **893***b*, with a plunger (not shown) attached to panel **883** and aligned with the spring. In its unforced state, the spring would exert force on the plunger, pushing panel **883** away from wall **893***a* to create overdrive gap **896**. However, as before, the actuator mechanism **820** could be used to overcome the spring force in the valve closing cycle, thereby creating the overdrive. Numerous other overdrive mechanisms may also be employed, as will be appreciated by those of skill in the art.

As illustrated in FIG. **25**, adaptor **800** is also provided with immovable pads **870** on both halves **802** and **804**. Pads **870** function to secure the catheter within adaptor **800** when it is closed, and to prevent movement of the catheter during valve opening and valve closing procedures. Accordingly, the material used for pads **870** is selected to have a high degree of frictional force with respect to the surface of the catheter body to which pads **870** will contact. A wide variety of polymeric and metallic materials are thus suitable to form pads **870** such as Kraton (™), C-Flex (™) or Pebax (™). In one embodiment, pads **870** are integrally molded with halves **802** and **804** out of medical grade polycarbonate, and are intended to contact a catheter tubular body formed from nitinol.

It is also preferred that half **804** be provided with guiding means to facilitate correct positioning of the catheter into the adaptor. For the embodiment illustrated in FIG. **25**, these guiding means consist of two or more clips **896** to facilitate positioning of a catheter into the adaptor. Clips **896** are provided with grooves **897** in which the catheter is inserted and secured prior to closure of adaptor **800**. Clips **896** may be formed of any material flexible enough to be capable of releasably securing the catheters to be used in adaptor **800**. In one preferred embodiment, clips **896** are formed of C-Flex 70A (™). On half **802**, and aligned with clips **896**, there are provided recesses **895**, to accept clips **896** when halves **802** and **804** are brought together and closed. Preferably, alignment indicia on the catheters to be used with adaptor **800** coincide with the spacing of clips **896**, so that by placing the catheter portion bearing the indicia directly in clips **896**, the catheter is properly inserted in the adaptor with its inflation access port contained in the fluid tight inflation chamber created by gaskets **880** upon closure of adaptor **800**. A projecting ridge **875** may also be provided to facilitate placement of the catheter, and direct its orientation during placement in the adaptor so that alignment is proper.

Alternately, other guiding means may be used as well. For example, clips **896** may comprise one or more magnetic elements which cooperate with gold-plated stainless steel rings (or other plated ferromagnetic substances) incorporated into the catheter tubular body to guide the catheter into the correct alignment position.

In one preferred embodiment, as shown in FIG. **25**, halves **802** and **804** are also provided with projecting shelves **898** and **899**, respectively, which come together when halves **802** and **804** are closed to form a slot therebetween in which the catheter resides. Advantageously, the slot created by shelves **898** and **899** acts to provide reinforcement to a catheter used in adaptor **800** during the valve opening and closing procedures, and helps to prevent buckling or kinking of the catheter tubular body when panels **883** and **884** are moved to open or close the catheter valve.

In clinical practice, there is a direct correlation between the distance that panel **884** moves and the distance moved by the sealer portion of a catheter valve when adaptor **800** is used. Consequently, a controlled and known movement of panel **884** over a set direction and distance results in a movement of the valve sealer portion in the same direction and for substantially the same distance. Thus, with a controlled movement adaptor such as adaptor **800**, there is no need to require a catheter having positive cooperating stops to prevent removal of the sealer portion from the catheter, as was described for the catheter of FIGS. **9**–**13**. The adaptor itself prevents accidental withdrawal of the sealer portion from the catheter, by precisely controlling the movement of the sealer portion within the catheter.

Accordingly, in one preferred embodiment, adaptor **800** is used with catheter **900**, which lacks positive cooperating stops, and is depicted in FIGS. **29** and **30**. Catheter **900** has

a tubular body **918** and inflatable balloon (not shown) as described above. Catheter **900** may be formed of materials and methods as described above, and may have structural aspects identical to those described previously, except where otherwise noted.

Catheter **900** has a proximal end **912**, and a distal end (not shown) to which is mounted an inflatable balloon. A central lumen **940** extends within tubular body **918** between the proximal and distal ends. An opening **923** to lumen **940** is present at the proximal end **912** of catheter **900**. A side-access port **922** in fluid communication with lumen **940** is provided on tubular body **918**.

A sealing member **930** is inserted into lumen **940** through central lumen opening **923**. Sealing member **930** has a first region **935** which has an outer diameter substantially the same as the outer diameter of the proximal end **912** of catheter tubular body. Region **935** has a taper **934**, reducing in diameter to a second region **933** which has an outer diameter less than the inner diameter of lumen **940**. Region **933** tapers over length **931** to form a plug mandrel wire **932**. As a consequence, region **933** and plug mandrel wire **932** are slidably insertable into the proximal opening **923** of catheter **900** and may freely move within lumen **940**. In one preferred embodiment, region **935** has an outer diameter of about 0.013 inches, region **933** has an outer diameter of about 0.0086 inches, and plug mandrel wire has a diameter of about 0.005 inches, with region **933** and plug mandrel wire **932** being inserted into a catheter having a central lumen **940** with an inner diameter of about 0.009 inches.

The length of sealing member region **935** extending proximally of catheter **900** may vary in length depending upon the intended use environment. For example, where catheter **900** is to be used as a guide for other catheters in an "over-the-wire" embodiment, it is preferred that the total length of catheter **900** and sealing member region **935** be about 300 centimeters. Alternately, where catheter **900** is to be used in a single operator or rapid exchange embodiment, it is preferred that the total length of catheter **900** and region **935** be about 180 centimeters. Accordingly, with a known catheter length and use environment, an appropriate length for region **935** may be chosen.

The elements of sealing member **930** may be formed of materials and by methods as described previously. For example, regions **935** and **933** and plug mandrel wire **932** may all be made out of metals such a stainless steel. Alternately, combinations of materials may be used as well. For example, in some applications it may be desirable to manufacture regions **935** and **933** out of stainless steel, while manufacturing plug mandrel wire **932** out nitinol. Furthermore, the various sealing member regions may be made from a single metal wire strand coined at various points to achieve the desired dimensional tolerances, or multiple segments may be joined together to form sealing member **930**.

Where multiple segments are joined, region **935**, region **933**, and plug mandrel wire **932** are attached to one another by any suitable means of bonding metal to metal, such as soldering, brazing, adhesives and the like. In one preferred embodiment, cyanoacrylate adhesives are used to adhere these various parts of sealing member **930** to one another.

As illustrated in FIGS. **29** and **30**, the outer diameter of sealing member region **933** is less than the inner diameter of lumen **940**, such that region **933** is slidably insertable into lumen **940**. In addition, the outer diameters of the tapered portions **931** and wire **932** are also small enough such that they too are slidably insertable in lumen **940**. However, the outer diameter of region **935** is greater than the inner diameter **940**, and thus only a small portion of tapered portion **934** of sealing member **930** between region **935** and region **933** is insertable into lumen **940** through opening **923**. Advantageously, this provides for a snug interference fit when sealing member **930** is fully inserted into catheter **900**. This interference fit provides a frictional force which counteracts the tendency of the pressurized fluids and internal wire flexing in the catheter to push sealing member **930** out of opening **923**.

As illustrated in FIGS. **29** and **30**, sealing member **930** has movement-force increasing structure which increases the force required to move sealing member **930** within lumen **940**. The movement-force increasing structure consists of waves **938***a* and **938***b* formed in wire **932** near its distal end. Waves **938***a* and **938***b* contact the inner surface of lumen **940**, thereby increasing the frictional force which must be overcome to move wire **932** within lumen **940**. In one preferred embodiment, where wire **932** is made of nitinol and has an outer diameter of about 0.005 inches, and is inserted into a nitinol catheter which has an inner lumen **940** with a diameter of about 0.090 inches, waves are formed on wire **932** for 1½ cycles with an amplitude of about 0.016 inches to increase the valve-opening movement force.

A lumen sealer portion **936** is coaxially and fixedly mounted on wire **932**. Sealer portion **936** forms a fluid tight seal with the outer diameter of wire **932** and the inner diameter of lumen **940**, such that fluid introduced into lumen **940** through side-access port **922** is prevented from flowing past sealer portion **936** when sealer portion **936** is inserted into lumen **940** distally of side-access port **922**. Sealer portion **936** forms the fluid tight seal by firmly contacting the entire inner circumference of a section of lumen **940** along a substantial portion of the length of sealer portion **936**, and may be formed of materials and by methods as previously described.

As shown in FIG. **29**, sealer portion **936** is positioned proximally of side-access opening **922**, so that an unrestricted fluid passageway exists between port **922** and the inflatable balloon at the distal end of catheter **900**. This is the valve open position described above. In this position, region **933** is shown partially withdrawn from opening **923**. Referring to FIG. **30**, sealer portion **936** is positioned distally of port **922**, so that fluid flow between port **922** and the inflatable balloon at the distal end of catheter **900** are substantially blocked. This is the valve closed position described above.

Catheter **900** is changed from the valve open position to the valve closed position by the movement of sealing member **930** and its various components. Preferably, the exact length of movement needed to change catheter **900** from the valve closed to the valve open position is built into the movement function of the adaptor used to manipulate sealing member **930** thereby opening and closing the catheter valve. In this regard, it is preferred that catheter **900** be used with an adaptor such as adaptor **800**, which provides for such controlled precise movement.

The "stroke-length", or overall movement in one dimension, of sealing member **930** required to open or close the valve may be varied depending upon the catheter requirements. When relying upon the inflation adaptor to control movement, however, it is important that the movement of the controlling elements of the adaptor be coordinated with those of sealing member **930**. With respect to adaptor **800**, this is accomplished by selecting a recess **893** dimension which precisely defines the distance that sealing member **930** is to travel to achieve the valve open and valve closed positions, without accidentally removing sealing

member **930** from opening **923**. In one embodiment, where access port **922** is positioned 36 mm from opening **923**, a stroke length of 5.5 mm was found to be suitable.

III. Expansion Members

The expansion members discussed herein include braids, coils, ribs, ribbon-like structures, slotted tubes, and filter-like meshes. These expansion members may be partially covered or completely surrounded by a membrane or other covering to provide occlusion or sealing of the vessel. As used herein, "occlusion" or "sealing", and the like, mean partial or complete blockage of fluid flow in a vascular segment, as it is sometimes preferable to allow perfusion. Moreover, such expansion members may be deployed by various mechanical means, electrical means or thermomechanical means, etc., as described herein. Expansion members that are deployed mechanically are preferably "spring-like" in nature, i.e. they are preferably resilient to facilitate their deployment or retraction.

A. Catheter Apparatuses and Self-expanding Braids

One embodiment of a catheter apparatus incorporating the present invention for treating occluded vessels is shown in FIGS. **31** and **32**. As shown therein, the catheter apparatus **1651** consists of a flexible elongate member **1652** which is provided with proximal and distal extremities **1653** and **1654**. A conventional adaptor **1656** is mounted on the proximal extremity and is provided with a Touhy-Borst fitting **1657** which is in communication with a large central lumen **1658** extending from the proximal extremity **1653** to the distal extremity **1654**. An aspiration fitting **1661** is provided on the adaptor **1656** as well as an irrigation fitting **1662**, both of which are in communication with the central lumen **1658**. However, it should be appreciated that if desired, separate lumens can be provided in the flexible elongate member **652** for both of the fittings **1661** and **1662**.

Self-expanding sealing mechanism **1666** is mounted on the distal extremity **1654**. This self-expanding sealing mechanism **1666** can take any suitable form. For example, as shown it can consist of a braided structure **1667** formed of a suitable shape memory material such as a nickel titanium alloy that will attempt to expand to a predetermined shape memory. Other than shape memory materials, other materials such as stainless steel, Elgiloy™, titanium or other materials can be utilized in the braid **1667** as long as they have the capability of expanding when the self-expanding seal mechanism is released. Also it should be appreciated that the self-expanding seal mechanism **1666** can be comprised of an absorbent material which when it absorbs saline or blood expands to form a seal. Such seals can be readily accomplished because it is only necessary to form a seal of approximately 1.5 psi to prevent small particles from moving downstream.

In order to prevent abrasion of a vessel, it is desirable to cover the braided structure **1667** with a covering **1668** of a suitable material such as a polymer or a biocompatible coating which extends over the braided structure **1667** and which moves with the braided structure **1667** as it expands and contracts. The polymer can be of a suitable material such as silicone, C-flex, polyethylene or PET which would form a good sealing engagement with the wall of the artery. The covering **1668** may be perforated to allow perfusion.

A mechanism is provided for compressing the self-expanding sealing mechanism **1666** so that the apparatus can be inserted into the vessel **1481** and consists of an elongate sleeve **1771** having proximal and distal extremities **1772** and **1773** and a bore **1774** extending from the proximal extremity **1772** to the distal extremity **1773**. A collar **1776** is mounted on the proximal extremity **1772** of the sleeve **1771** and is positioned near the adaptor **1656**. The collar **1776** serves as a mechanism for retracting the sleeve as shown in FIG. **32** to uncover the self-expanding sealing mechanism **1666** after the catheter has been deployed to permit the self-expanding sealing mechanism **1666** to expand and form a seal with the arterial vessel adjacent the stenosis to be treated.

Another embodiment of a catheter apparatus for treating occluded vessels incorporating the present invention is shown in FIGS. **33** and **34**. As shown therein, the apparatus **1781** consists of a guiding catheter **1782** having proximal and distal extremities **1783** and **1784**. As shown, the distal extremity **1784** is provided with a pre-formed bend of a conventional type. A conventional attachment **1786** is mounted on the proximal extremity **1783**. Self-expanding seal mechanism **1791** is mounted on the distal extremity **1784** and is of the type hereinbefore described in connection with the embodiments shown in FIGS. **31** and **32**. A sleeve **1796** similar to the sleeve **1771** of the previous embodiment is provided in the present embodiment for encasing the self-expanding seal mechanism **1791** and for releasing the same after it has been disposed in an appropriate position within a vessel adjacent the occlusion to be treated. Thus, a sleeve **1796** is provided having proximal and distal extremities **1797** and **1798** and having a bore **1799** extending from the proximal extremity to the distal extremity which is sized so that it can receive the guide catheter **1782**. It is provided with a collar **1801** on its proximal extremity which is adapted to be disposed outside the patient and which is adapted to be grasped by the physician for pulling the sleeve **1796** proximally to uncover the self-expanding seal **1791** after the apparatus has been deployed to permit the self-expansion of the sealing mechanism **1791** to form a seal with the vessel wall as shown in FIG. **34**.

In accordance with the hereinbefore described descriptions, it is apparent that the apparatus can be readily deployed and serve the same function as the main catheter. To accomplish this, the assembly **1781** can be introduced into the femoral artery and the distal extremity advanced into the desired location in the arterial vessel. After it has been properly positioned, the physician can retract the sleeve **1796** to permit the self-expanding seal mechanism **1791** to expand and to form a seal with the wall of the arterial vessel to occlude the arterial vessel and interrupt the flow of blood in the vessel to provide a working space distal of the occlusion formed. This prevents small particles which may thereafter be dislodged from moving downstream. Since a central lumen is available, the therapeutic procedures hereinbefore described can be employed with the catheter apparatus shown in FIGS. **31–34**.

Although the self-expanding sealing mechanism **1666 (1791)** can be deployed by retracting the sleeve **1771 (1796)** as previously described, the sealing mechanism can also be deployed by pushing the flexible elongate member **1652** (guiding catheter **1782**) through the sleeve so that the sealing mechanism can expand. This may be the preferred way of deploying the sealing mechanism **1666 (1791)**, if there is little clearance between the apparatus **1651 (1781)** and the vessel within which the apparatus resides, to reduce the risk of damaging the patient's vessel. As discussed below in connection with subsequent figures, the sealing mechanism **1666 (1791)** may alternatively comprise members such as a coil, a ribbon-like structure, a slotted tube, or a filter-like mesh. In each case, the sealing mechanism expands to partially or completely occlude the vessel in question, or alternatively, to anchor an intravascular device to the vessel.

Furthermore, although the embodiments described in FIGS. **31–34** are illustrated with an adaptor **1656** or attach-

ment **1786**, these may be easily removed to allow an exchange of catheters over the member **1652** or **1782**. Such an embodiment is shown in FIG. **35**. When retracting the sleeve **1796** to deploy the sealing mechanism **1791**, the sleeve **1796** may remain on the member **1782**, or may be completely removed as shown in FIG. **36**. By removing the sleeve completely, the catheters exchanged over the guiding member can have a lower profile to allow insertion into smaller vessels.

B. Alternative Self-expanding Members

Another embodiment using a braided structure is shown schematically in FIG. **37**, in which a flexible elongate member **1020** is disposed within a second elongate member **1024** such as a hypotube. A self expanding mechanism **1028** such as a braided structure is secured to the distal end of the elongate member **1020**, preferably within an indentation **1032** of member **1020**. The braided structure **1028** is only partially encapsulated by a preferably elastomeric membrane **1036** that makes a seal with the patient's vessel **1040**. (Alternatively, a coating such as a polymeric coating may be used in place of the membranes disclosed herein.) In this and the other embodiments, adhesive may be used to secure the self-expanding mechanism **1028** and the membrane **1036** to the elongate member **1020**. In the embodiment of FIG. **37**, the braided structure **1028** and membrane **1036** are designed to be asymmetrical, with more material being concentrated at the proximal side of the structure **1028**. The braids of the embodiments disclosed herein may be stainless steel 304 or 400, superelastic or heat activated Nitinol, an iron base shape memory alloy, or a polymer base, such as polyethylene or polypropylene. They may be constructed, for example, by using standard equipment such as a braider.

Although the embodiment of FIG. **37** shows the flexible elongate member **1020** connected to a guidewire tip **1044**, other technologies for guiding the device through the patient's vessel **1040** may be used in this and the other embodiments, such as a guidewire (either over the wire or single operator) or the exchange catheter method, as is well known in the art. Also, although not explicitly shown in the embodiment of FIG. **37** and the other embodiments herein, these embodiments may include lumens, aspiration and irrigation fittings, and collars like those illustrated in FIGS. **31–34**.

The membrane **1036** is preferably impervious to the flow of blood (FIG. **38**A) for those applications not requiring perfusion, although a perforated membrane **1036'** (FIG. **38**B) having numerous holes **1037** therein may be used in other applications to allow the passage of blood. The holes **1037** are preferably greater than 10 microns in diameter and may be up to 80 microns or more in diameter to permit the passage of blood cells (nominally 6–10 microns in diameter) through the membrane **1036'** while blocking larger particulates such as emboli. Likewise, a perforated membrane **1036'** may be used in the other embodiments disclosed herein. Antithrombogenic coatings can be used (e.g., heparin) to prevent thrombosis formation.

FIG. **39** shows an embodiment in which a braided structure **1050** is not enclosed by a membrane. When the braided structure **1050** comprises, for example, a diamond mesh pattern in which adjacent wires are separated by about 10–80 microns, the braided structure permits the passage of red blood cells, while blocking the flow of matter that may be undesirable, e.g., emboli or other particulates that may be formed or dislodged during medical procedures. Thus, this embodiment is well suited for applications for which perfusion is required.

Alternative self-expanding media are shown in FIGS. **40** and **41**. In FIGS. **40** and **41**, a self-expanding filter-like mesh **1060** and a self-expanding slotted tube **1072**, respectively, are surrounded by a membrane **1062** that is preferably elastomeric. The filter-like mesh **1060** (or slotted tube **1072**) and membrane **1062** are bonded or otherwise secured to a flexible elongate member **1064**, e.g., to an indentation therein. As with the other self-expanding media disclosed herein, the filter-like mesh **1060** (or slotted tube **1072**) expands from its unexpanded state when the flexible elongate member **1064** is pushed through a second elongate member **1066**, or alternatively, when the second elongate member **1066** is retracted over the first elongate member **1064**. The filter-like mesh **1060** (or slotted tube **1072**) then expands so that the membrane **1062** forms a seal with the surrounding vessel **1068**. A guidewire tip **1070** aids in guiding the device through the vessel **1068**. The filter-like mesh **1060** and slotted tube **1072** are of a suitable shape memory material such as Nitinol or (304 or 400) stainless steel. The filter-like mesh **1060** is fibrous in nature, being somewhat analogous to steel wool. The slotted tube **1072** has a lattice-like appearance. The slotted tube **1072** may be constructed, for example, by irradiating a thin-walled tube with a laser beam to form holes in the tube in the shape of polygons such as oblong quadrilaterals. An unexpanded, slotted tube **1074** is shown in FIG. **42**.

FIG. **43** illustrates another embodiment, in which a coil **1080** serves as the self-expanding mechanism. The coil **1080** may be integrally formed with a first elongate member **1082** or be otherwise specially joined to it, e.g., by welding or brazing the coil to the elongate member **1082**. The coil **1080** is surrounded by a membrane **1084** that expands with the coil when it is pushed out of a second elongate member **1086**, or alternatively, when the second elongate member **1086** is retracted from the coil **1080**. Thus, the membrane forms a seal with the surrounding vessel **1090**. The membrane **1084** may be attached directly to the first elongate member **1082**, or to a member **1088** such as a disk that is in turn secured to the coil **1080** or the first elongate member **1082**. A guidewire tip **1092** for guiding the device through the vessel **1090** may be attached to the first elongate member **1082** or to the member **1088**, if one is used.

An embodiment similar to that shown in FIG. **43** is illustrated in FIG. **44**, in which the membrane **1084** is secured at the proximal end to a separate sheath **1094**. In this case, the sheath **1094** and the first elongate member **1082** are extended together over and through, respectively, the second elongate member **1086**. Assembly may require preloading the coil **1080** through the distal end of the second elongate member **1086**.

Another embodiment that employs a self-expanding medium is shown in FIG. **45**, in which a plurality of ribbons **1100** make contact with a membrane **1102** while they expand to urge the membrane towards the wall of the vessel **1104** where it makes a seal. The ribbons **1100** of this embodiment are preferably secured to a first elongate member **1106** at both ends of the ribbons, by, for example, gluing them in place. The ribbons may be 0.001–0.004"× 0.005–0.020"×0.25–1.0" strips of Nitinol, stainless steel, or Elgiloy™ which expand when urged out of the second elongate member **1108**. A guidewire tip **1110** may be used for guiding the device through the vessel and is preferably secured to the distal end of the first elongate member **1106**.

FIG. **46** illustrates an embodiment similar to the one in FIG. **45**, in which ribs **1120** such as wires form a series of semicircular arcs when they expand. The ribs **1120** are surrounded by a membrane **1122** that expands with the ribs to form a seal with the vessel **1124**. The number of ribs **1120** is preferably at least three. The ribs **1120** are preferably

attached directly to a first elongate member **1124** that is surrounded by a second elongate member **1126**. The ribs **1120** themselves are preferably made of a shape memory material such as Nitinol or stainless steel. A guidewire tip **1128** aids in guiding the device through the vessel **1130**.

As in the other self-expanding embodiments, the self-expanding mechanism **1100** (**1120**) is in an unexpanded state when enclosed by the second elongate member **1108** (**1126**), and expands when pushed or pulled beyond the second elongate member **1108** (**1126**).

C. Non-self-expanding embodiments

1. Heat Activated Embodiments

FIGS. **44**A and **44**B illustrate how electrical means can be used to generate heat to expand an expansion member. A first elongate member **1082**' (and a coil **1080**' which adjoins it, coil **1080**' and member **1082**' being similar to their unprimed counterparts) is preferably made of heat activated Nitinol, an iron base shape memory alloy, or another material that expands when exposed to heat. As shown in FIG. **44**A, low profile, low resistivity electrical lines **1081** and **1083** preferably pass either through or along the second elongate member **86** and are attached (e.g., soldered) to the first elongate member **1082**' on either side of the coil **1080**'. When current is applied through the electrical lines **1081** and **1083** (the power supply is not shown but is preferably outside the patient), the coil **1080**' heats up through resistive heating, and the coil expands to urge the membrane **1084** to contact the vessel wall **1090**. Alternatively, as shown in FIG. **44**B, the first elongate member **1082**' may have a coating **1085** of gold or silver. In this embodiment, the coated elongate member **1082**' is used to pass current (with most of the current preferably being carried by the coating **1085**, so that most of the energy is deposited in the coil **1080**'), with the circuit being completed with a low resistivity wire **1087** that is preferably connected (e.g., soldered) to either the second elongate member **1086** or the sheath **1094**. This principle of resistive heating to expand a expansion member can be applied to the other embodiments disclosed herein as well.

FIGS. **45**A, **45**B and **45**C illustrate how heat transfer using a liquid can deploy an expansion member. The ribbons **1100**' are preferably made of heat activated Nitinol, an iron base shape memory alloy, or another material that expands when exposed to heat. In the embodiment of FIG. **45**A, a warm saline solution **1107** is passed between the first and second elongate members **1106** and **1108** and then over the membrane **1102**, so that heat is transferred to the ribbons **1100**'. As the ribbons **1100**' heat up, they expand, thereby urging the membrane **1102** against the vessel wall **1104**. As illustrated in FIG. **45**B, the warm saline solution **1107** may also be passed through the first elongate member **1106** and then through holes **1109** in member **1106** so that the saline solution **1107** more directly transfers heat to the ribbons **1100**'. In this embodiment, one or more holes **1111** in the membrane **1102** (distal to where the seal with the vessel wall **1104** is made) may be used to allow the saline solution **1107** to flow away beyond the ribbons **1100**' after heat transfer to the ribbons occurs. As illustrated in FIG. **45**C, the saline solution **1107** may also be passed through one or more closed loop coils or lumens **1113** within the first elongate member **1106**. In this way, the ribbons **1100**' and the patient's blood are not exposed directly to any solution. Using heat transfer can also be applied to the other embodiments disclosed herein, provided the expansion member is suitably constructed.

2. Mechanically Deployed Embodiments

Other non-self-expanding sealing mechanisms that can be used for occluding a vessel are described below. In the embodiment of FIGS. **47**–**49**, a first elongate member **1140**, preferably a pull wire, is (when the device is completely assembled) attached to a brace member **1144** that is in turn attached to a first ring member **1148**. Adjoining the first ring member **1148** and a second ring member **1152** are a plurality of ribbons **1156** that extend between the two ring members. Surrounding the ribbons **1156** is a membrane **1160** that forms a seal with the patient's vessel **1162** when the ribbons are expanded. The membrane **1160** is joined to at least one and preferably both of the ring members **1148** and **1152**. The membrane **1160** can be joined to only one of the ring members **1148** and **1152**, for example, when the membrane **1160** extends far enough in the longitudinal direction to permit the membrane to make a good seal with the vessel **1162** when the ribbons **1156** are deployed.

To assemble the device, the first and second ring members **1148** and **1152**, the ribbons **1156**, and the membrane **1160** are placed as a unit around a second elongate member **1166**, which has a pair of oppositely facing holes **1170** and **1172**. The brace member **1144** is inserted through the holes **1170** and **1172** and secured to both the pull wire **1140** and the first ring member **1148**. Further, the second ring member **1152** is secured to the second elongate member **1166**. This assembled configuration, with the ribbons **1156** in their longitudinal orientation, is illustrated in FIG. **48**. As illustrated in FIG. **49**, when the pull wire **1140** is retracted, the ribbons **1156** (shown in phantom) and the membrane **1160** that surrounds them are urged towards the vessel **1162**, where the membrane makes a seal with the vessel. The ribbons **1160** are preferably resilient enough so that they return to their longitudinal orientation when the pull wire **1140** is released. The elasticity and resilience of the pull wire **1140** also helps the ribbons **1156** return to their undeployed configuration. A guidewire tip **1171** may be used to assist in guiding the device to the desired location in the vessel **1162**.

A preferred way of retracting the pull wire **1140** is shown in FIGS. **50**A and **50**B. FIG. **50**A shows the pull wire **1140**, which is attached to the brace member **1144**. A rotatable handle **1180** is attached to a locking member **1184** which in turn is fastened to the pull wire **1140**. When the locking member **1184** clears the second elongate member **1166** within which it resides (which is preferably outside the patient), the locking member and rotatable handle **1180** may be oriented as illustrated in FIG. **50**B to keep the pull wire **1140** taught, thereby preventing the sealing mechanism from returning to its undeployed position. The pull wire **1140** may be made of stainless or nitinol and may have a diameter of 0.006–0.008 inches, for a catheter having an O.D. of 0.014", for example.

An alternative to the deployment apparatus illustrated in FIGS. **50**A and **50**B is shown in FIG. **51**A, in which a handle member **1190** is grasped by the clinician to retract the pull wire **1140**, thereby deploying the sealing mechanism. Once extended, the sealing mechanism preferably has the tendency to return to its undeployed position, which in the process pulls the pull wire **1140** back into the second elongate member **1166**. This can be prevented by inserting a spacer member **1194** between the handle member **190** and the second elongate member **1166**. After the medical procedure is complete, and occlusion of the vessel is no longer required, the spacer member **1194** can be removed and the pull wire **1140** and the sealing mechanism returned to their respective undeployed positions. The device can then be removed from the patient.

Both pull wire mechanisms shown in FIGS. **50**A and **51**A are preferably engaged by use of an adaptor **1186** or **1196**, as shown in FIGS. **50**C and **51**B, respectively. This adaptor

1186 or 1196 allows for easier control of the pull wire mechanism. In FIG. 50C, the knob 1188 is adapted to connect to the rotatable handle 1180 and locking member 1184. By turning and pulling the knob 1188, the pull wire 1140 may be retracted to deploy the sealing mechanism. In FIG. 51B, the handle 1198 can be grasped to pull handle member 1190 away from second elongate member 1166. This opens up a space between members 1190 and 1166 to allow spacer member 1194 to be inserted through a window in adaptor 1196 for holding the pull wire 1140 taut. Once the pull wire mechanism is engaged, the adaptor in both embodiments may be removed to allow for an exchange over the proximal end of the pull wire devices.

Although the principle of using a non-self-expanding mechanism has been illustrated in FIGS. 47–49 with respect to deformable ribbons, other non-self-expanding mechanisms, as illustrated in FIGS. 52A–52D, can be employed in conjunction with the brace member 1144 and the first and second ring members 1148 and 1152. For example, instead of using ribbons 1156, a non-self-expanding braided structure 1200 can be used, in which the braided structure 1200 adjoins first and second ring members 1148 and 1152 and is covered with a membrane 1160 to form the unit 1204 shown in FIG. 52A. The unit 1204 can be used in conjunction with an elongate member 1166, a brace member 1144, a guidewire tip 1171, a first elongate member 1140 such as a pull wire, a rotatable handle 1180, and a locking member 1184 to form a device analogous to the ribbon-based device of FIG. 47. Alternatively, other mechanisms can be used for securing the pull wire 1140, such as a handle member 1190 and a spacer member 1194.

Other non-self-expanding mechanisms such as a filter-like mesh 1208, a slotted tube 1212, and coils 1216 can be used to form units 1220, 1230, and 1240 analogous to the braided structure unit 1204 as shown in FIGS. 52B, 52C and 52D. Units 1220, 1230, and 1240 can likewise be used to construct devices analogous to the ribbon-based device illustrated in FIGS. 47–51. Further, if unit 1204 is used without a membrane, it may assist in blood perfusion if the braided structure 1200 is suitably constructed. Alternatively, perforated membranes like membranes 1036' of FIG. 38B may be used to permit blood perfusion. Although the ribbons 1156, the braided structure 1200, the filter-like mesh 1208, the slotted tube 1212, and the coils 1216 must be actively deployed (e.g. with a pull wire 1140), they are nevertheless similar to their self-expanding counterparts.

It should be understood that the scope of the present invention is not be limited by the illustrations or the foregoing description thereof, but rather by the appended claims, and certain variations and modifications of this invention will suggest themselves to one of ordinary skill in the art.

What is claimed is:

1. A catheter system for emboli containment, comprising:

a guidewire having a proximal end and a distal end;

an occlusive device connected to the distal end of the guidewire, the occlusive device being actuatable between an expanded state in which the occlusive device engages at least a portion of the walls of a blood vessel, and a nonexpanded state in which the occlusive device does not engage the walls of the blood vessel;

a first treatment catheter having a proximal end and a distal end and a lumen extending therethrough; and

a second treatment catheter having a proximal end and a distal end and a lumen extending therethrough;

wherein the first treatment catheter is adapted to be delivered over and then removed from the guidewire, and the second treatment catheter is adapted to be delivered over and then removed from the guidewire following removal of the first treatment catheter, and wherein the occlusive device is capable of maintaining its expanded state while the first treatment catheter is removed from the guidewire and while the second treatment catheter is delivered over the guidewire;

wherein the occlusive device is a self-expanding sealing member.

2. The catheter system of claim 1, further comprising a sleeve provided over the self-expanding sealing member, wherein removal of the sleeve actuates the self-expanding sealing member.

3. A catheter system for emboli containment, comprising:

a guidewire having a proximal end, a distal end, and a lumen extending therethrough;

an occlusive device connected to the distal end of the guidewire, the occlusive device being actuatable between an expanded state in which the occlusive device engages at least a portion of the walls of a blood vessel, and a nonexpanded state in which the occlusive device does not engage the walls of the blood vessel;

a first treatment catheter having a proximal end and a distal end and a lumen extending therethrough; and

a second treatment catheter having a proximal end and a distal end and a lumen extending therethrough;

wherein the first treatment catheter is adapted to be delivered over and then removed from the guidewire, and the second treatment catheter is adapted to be delivered over and then removed from the guidewire following removal of the first treatment catheter, and wherein the occlusive device is capable of maintaining its expanded state while the first treatment catheter is removed from the guidewire and while the second treatment catheter is delivered over the guidewire;

wherein the occlusive device is actuated by a pull wire extending through the lumen of the guidewire.

4. The catheter system of claim 3, wherein the occlusive device is a filter.

5. The catheter system of claim 4, wherein the first treatment catheter is a therapy catheter.

6. The catheter system of claim 5, wherein the second treatment catheter is an aspiration catheter.

7. The catheter system of claim 4, wherein the second treatment catheter is a therapy catheter.

8. The catheter system of claim 4, wherein the second treatment catheter is an aspiration catheter.

9. The catheter system of claim 4, further comprising a third treatment catheter having a proximal end and a distal end and a lumen extending therethrough, wherein the third treatment catheter is adapted to be delivered over and then removed from the guidewire following removal of the first treatment catheter and prior to delivery of the second treatment catheter.

10. The catheter system of claim 9, wherein the first treatment catheter has a dilatation balloon of a first diameter on its distal end, the third treatment catheter has a dilatation balloon of a second diameter on its distal end, the second diameter being larger than the first diameter, and the second treatment catheter is an aspiration catheter.

11. The catheter system of claim 4, wherein the guidewire includes a lumen extending therethrough.

12. A catheter system for emboli containment, comprising:

a guidewire having a proximal end and a distal end;

an occlusive device connected to the distal end of the guidewire, the occlusive device being actuatable

between an expanded state in which the occlusive device engages at least a portion of the walls of a blood vessel, and a nonexpanded state in which the occlusive device does not engage the walls of the blood vessel; and

a catheter having a proximal end and a distal end and a lumen extending therethrough, the catheter being adapted to be delivered over and removed from the guidewire;

wherein the occlusive device is capable of maintaining its expanded state while the catheter is either advanced over or removed from the guidewire;

wherein the occlusive device is a self-expanding sealing member.

13. The catheter system of claim **12**, further comprising a sleeve provided over the self-expanding sealing member, wherein removal of the sleeve actuates the self-expanding sealing member.

14. A catheter system for emboli containment, comprising:

a guidewire having a proximal end, a distal end, and a lumen extending therethrough;

an occlusive device connected to the distal end of the guidewire, the occlusive device being actuatable between an expanded state in which the occlusive device engages at least a portion of the walls of a blood vessel, and a nonexpanded state in which the occlusive device does not engage the walls of the blood vessel; and

a catheter having a proximal end and a distal end and a lumen extending therethrough, the catheter being adapted to be delivered over and removed from the guidewire;

wherein the occlusive device is capable of maintaining its expanded state while the catheter is either advanced over or removed from the guidewire;

wherein the occlusive device is actuated by a pull wire extending through the lumen of the guidewire.

15. The catheter system of claim **14**, wherein the occlusive device is a filter.

* * * * *