US008784343B2

(12) **United States Patent**
Bonutti et al.

(10) **Patent No.: US 8,784,343 B2**
(45) **Date of Patent: Jul. 22, 2014**

(54) **RANGE OF MOTION SYSTEM**

(75) Inventors: **Peter M. Bonutti**, Effingham, IL (US); **Glen A. Phillips**, Effingham, IL (US); **Justin E. Beyers**, Effingham, IL (US)

(73) Assignee: **Bonutti Research, Inc.**, Effingham, IL (US)

(*) Notice: Subject to any disclaimer, the term of this patent is extended or adjusted under 35 U.S.C. 154(b) by 112 days.

(21) Appl. No.: **13/194,496**

(22) Filed: **Jul. 29, 2011**

(65) **Prior Publication Data**

US 2012/0029398 A1 Feb. 2, 2012

Related U.S. Application Data

(62) Division of application No. 11/203,516, filed on Aug. 12, 2005, now Pat. No. 8,012,108.

(51) **Int. Cl.**

A61H 1/02	(2006.01)
A61F 5/01	(2006.01)
A63B 23/00	(2006.01)

(52) **U.S. Cl.**

CPC ***A61F 5/0102*** (2013.01); ***A61H 1/0218*** (2013.01); ***A61H 1/0274*** (2013.01); *A63B 2023/006* (2013.01); ***A61H 1/0237*** (2013.01); *A61F 2005/0139* (2013.01); *A61F 2005/0137* (2013.01); ***A61H 1/0296*** (2013.01); *A61H 2201/1607* (2013.01); *A61F 2005/0153* (2013.01)

USPC **601/5**; 601/33; 602/16

(58) **Field of Classification Search**

CPC A61H 3/00; A61H 1/02; A61H 1/0218; A61H 1/0237; A61H 1/0274; A61H 1/0296; A61H 1/0277; A61H 1/0281; A61H 1/0285; A61H 2001/0207; A61H 2001/027; A61F 5/0102

USPC 601/5, 23, 24, 26–35, 40, 97, 98, 101, 601/104; 602/5, 13, 16, 20, 26, 32, 36–38; 482/124

See application file for complete search history.

(56) **References Cited**

U.S. PATENT DOCUMENTS

433,227	A	7/1890	Beacock
2,191,283	A	2/1940	Longfellow
2,206,902	A	7/1940	Kost
2,223,276	A	11/1940	Ward

(Continued)

FOREIGN PATENT DOCUMENTS

CA	2066151	10/1992
CA	2065669	10/1993

(Continued)

OTHER PUBLICATIONS

Smith & Nephew Donjoy; Quadrant Shoulder Brace; http://www.shoulder.com/quadrant.htm; Jun. 5, 1998; p. 1.

(Continued)

Primary Examiner — Quang D Thanh

(57) **ABSTRACT**

The application is directed to devices and methods useful for expanding the range of motion of joints based on principles of stress relaxation and creep. Expanded range of motion is achieved by placing body parts near the joint in positions that stretch tissue around the joint. Even when the device is in any one position, it can impart forces on the body members to urge them to stretch surrounding tissue even further.

4 Claims, 19 Drawing Sheets

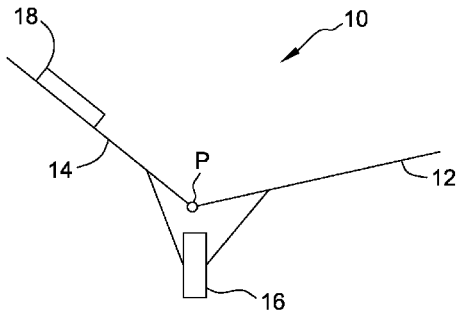

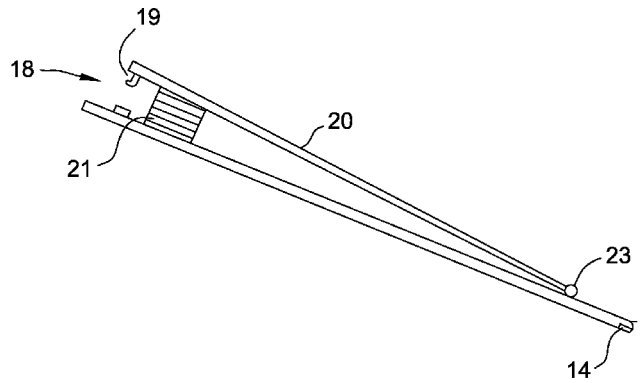

(56) **References Cited**

U.S. PATENT DOCUMENTS

2,237,252 A 4/1941 Longfellow
2,246,689 A 6/1941 Kost
2,250,493 A 7/1941 Milne
2,590,729 A 3/1952 Scognamillo
2,590,739 A 3/1952 Wahner et al.
2,811,154 A 10/1957 Scholl
2,820,455 A 1/1958 Hall
2,829,562 A 4/1958 La Rue
2,832,334 A 4/1958 Whitelaw
3,083,708 A 4/1963 Gottfried
3,338,237 A 8/1967 Sconce
3,351,055 A 11/1967 Gottfried
3,548,818 A 12/1970 Kaplan
3,580,248 A 5/1971 Larson
3,698,389 A 10/1972 Guedel
3,701,349 A 10/1972 Larson
3,724,452 A 4/1973 Nitschke
3,760,056 A 9/1973 Rudy
3,795,243 A 3/1974 Miller
3,811,434 A 5/1974 Jacobson et al.
3,814,419 A 6/1974 Bjorklund et al.
3,856,004 A 12/1974 Cox
3,955,565 A 5/1976 Johnson, Jr.
3,970,316 A 7/1976 Westmoreland, Jr.
3,976,057 A 8/1976 Barclay
4,039,183 A 8/1977 Sakurada
4,076,022 A 2/1978 Walker
4,084,267 A 4/1978 Zadina
4,108,170 A 8/1978 Spann
4,180,870 A 1/1980 Radulovic et al.
4,214,577 A 7/1980 Hoy
4,229,001 A 10/1980 Roman
4,237,873 A 12/1980 Terry et al.
4,241,731 A 12/1980 Pauley
4,273,113 A 6/1981 Hofstein
4,285,773 A 8/1981 Taciuk
4,320,748 A 3/1982 Racette et al.
4,363,481 A 12/1982 Erickson
4,370,977 A 2/1983 Mauldin et al.
4,383,523 A 5/1983 Schurman
4,417,569 A 11/1983 Brudny
4,441,489 A 4/1984 Evans et al.
4,454,871 A 6/1984 Mann et al.
4,456,001 A 6/1984 Pescatore
4,456,002 A 6/1984 Barber et al.
4,502,470 A 3/1985 Kiser et al.
4,502,681 A 3/1985 Blomqvist
4,508,111 A 4/1985 Hepburn
4,509,509 A 4/1985 Bouvet et al.
4,538,595 A 9/1985 Hajianpour
4,538,600 A 9/1985 Hepburn
4,570,619 A 2/1986 Gamm
4,576,151 A 3/1986 Carmichael et al.
4,589,406 A 5/1986 Florek
4,606,542 A 8/1986 Segal
4,612,919 A 9/1986 Best
4,628,913 A 12/1986 Lerman
4,641,639 A 2/1987 Padilla
4,653,479 A 3/1987 Maurer
4,665,905 A 5/1987 Brown
4,693,239 A 9/1987 Clover, Jr.
4,716,889 A 1/1988 Saringer
4,718,665 A 1/1988 Airy et al.
4,727,865 A 3/1988 Hill-Byrne
4,739,334 A 4/1988 Soref
4,765,320 A 8/1988 Lindemann et al.
4,788,941 A 12/1988 Villeneuve
4,790,301 A 12/1988 Silfverskiold
4,793,334 A 12/1988 McGuinness et al.
4,805,601 A 2/1989 Eischen, Sr.
4,807,601 A 2/1989 Wright
4,809,688 A 3/1989 Aymerica del Valle et al.
4,834,073 A 5/1989 Bledsoe et al.
4,844,094 A 7/1989 Grim
4,844,454 A 7/1989 Rogers
4,844,455 A 7/1989 Funkhouser, Jr.
4,848,326 A 7/1989 Lonardo
4,862,877 A 9/1989 Barber
4,865,024 A 9/1989 Hensley et al.
4,869,267 A 9/1989 Grim et al.
4,869,499 A 9/1989 Schiraldo
4,884,454 A 12/1989 Johnson
4,913,135 A 4/1990 Mattingly
4,913,755 A 4/1990 Grim
4,930,497 A 6/1990 Saringer
4,953,543 A 9/1990 Grim et al.
4,955,369 A 9/1990 Bledsoe et al.
4,955,396 A 9/1990 Fralick et al.
4,957,281 A 9/1990 Christolear, Jr.
4,964,402 A 10/1990 Grim et al.
4,991,234 A 2/1991 Greenberg
4,996,979 A 3/1991 Grim et al.
5,005,563 A 4/1991 Veale
5,018,514 A 5/1991 Grood et al.
5,019,050 A 5/1991 Lynn et al.
5,025,782 A 6/1991 Salemo
5,027,688 A 7/1991 Suzuki et al.
5,027,801 A 7/1991 Grim
5,027,802 A 7/1991 Donohue
5,036,837 A 8/1991 Mitchell et al.
5,036,838 A 8/1991 Sherman
5,052,375 A 10/1991 Stark et al.
5,052,379 A 10/1991 Airy et al.
5,070,866 A 12/1991 Alexander et al.
5,078,128 A 1/1992 Grim et al.
5,088,481 A 2/1992 Darby
5,100,403 A 3/1992 Hotchkiss et al.
5,102,411 A 4/1992 Hotchkiss et al.
5,116,359 A 5/1992 Moore
5,125,400 A 6/1992 Johnson, Jr.
5,135,470 A 8/1992 Reeves
5,139,475 A 8/1992 Robicsek
5,141,489 A 8/1992 Sereboff
5,156,589 A 10/1992 Langen et al.
5,163,451 A 11/1992 Grellas
5,167,612 A 12/1992 Bonutti
5,191,903 A 3/1993 Donohue
5,197,942 A 3/1993 Brady
5,201,702 A 4/1993 Mars
5,201,772 A 4/1993 Maxwell
5,203,321 A 4/1993 Donovan et al.
5,211,161 A 5/1993 Stef
5,213,094 A * 5/1993 Bonutti 601/33
5,213,095 A 5/1993 Dague
5,218,954 A 6/1993 van Bemmelen
5,226,245 A 7/1993 Lamont
5,232,435 A 8/1993 Leibinsohn
5,252,101 A 10/1993 Rosenwinkel et al.
5,252,102 A 10/1993 Singer et al.
5,261,125 A 11/1993 Cartwright et al.
5,277,695 A 1/1994 Johnson, Jr. et al.
5,285,773 A 2/1994 Bonutti et al.
5,297,540 A 3/1994 Kaiser et al.
5,312,322 A 5/1994 Santana
5,316,022 A 5/1994 Schiek, Sr.
5,323,435 A 6/1994 Baversten
RE34,661 E 7/1994 Grim
5,327,882 A 7/1994 Saringer et al.
5,328,448 A 7/1994 Gray, Sr.
5,329,705 A 7/1994 Grim et al.
5,348,530 A 9/1994 Grim et al.
5,349,956 A 9/1994 Bonutti
5,352,216 A 10/1994 Shiono et al.
5,354,260 A 10/1994 Cook
5,364,323 A 11/1994 Liu
5,365,947 A 11/1994 Bonutti
5,370,133 A 12/1994 Darby et al.
5,372,597 A 12/1994 Hotchkiss et al.
5,376,091 A 12/1994 Hotchkiss et al.
5,378,223 A 1/1995 Grim et al.
5,385,536 A 1/1995 Burkhead et al.
5,389,065 A 2/1995 Johnson, Jr.
5,391,132 A 2/1995 Greenwald
5,395,303 A 3/1995 Bonutti et al.

(56) **References Cited**

U.S. PATENT DOCUMENTS

5,399,152	A	3/1995	Habermeyer et al.	
5,403,265	A	4/1995	Berguer et al.	
5,407,420	A	4/1995	Bastyr et al.	
5,407,422	A	4/1995	Matthijs et al.	
5,417,643	A	5/1995	Taylor	
5,419,757	A	5/1995	Daneshvar	
5,421,874	A	6/1995	Pearce	
5,435,009	A	7/1995	Schild et al.	
5,437,611	A	8/1995	Stern	
5,437,619	A	8/1995	Malewicz et al.	
5,452,205	A	9/1995	Telepko	
5,453,075	A	9/1995	Bonutti et al.	
5,453,082	A	9/1995	Lamont	
5,456,268	A	10/1995	Bonutti	
5,456,286	A	10/1995	Warner et al.	
5,464,385	A	11/1995	Grim	
5,466,213	A	11/1995	Hogan et al.	
5,466,250	A	11/1995	Johnson, Jr. et al.	
5,472,407	A	12/1995	Schenck	
5,472,410	A	12/1995	Hamersly	
5,492,133	A	2/1996	McVicker	
5,503,619	A	4/1996	Bonutti	
5,503,622	A	4/1996	Wehr	
5,503,908	A	4/1996	Faass	
5,518,009	A	5/1996	Ruiz-Gonzalez	
5,520,181	A	5/1996	Kreidler et al.	
5,520,620	A	5/1996	Johnson	
5,520,628	A	5/1996	Wehr	
5,527,269	A	6/1996	Reithofer	
5,531,669	A	7/1996	Varnau	
5,535,274	A	7/1996	Braitberg et al.	
5,538,486	A	7/1996	France et al.	
5,571,077	A	11/1996	Klearman et al.	
5,575,764	A	11/1996	Van Dyne	
5,577,998	A	11/1996	Johnson, Jr. et al.	
5,605,535	A	2/1997	Lepage	
5,609,570	A	3/1997	Lamont	
5,611,764	A *	3/1997	Bonutti et al.	601/33
5,620,411	A	4/1997	Schumann et al.	
5,626,537	A	5/1997	Danyo et al.	
5,647,378	A	7/1997	Farnum	
5,653,680	A	8/1997	Cruz	
5,662,595	A *	9/1997	Chesher et al.	601/33
5,665,059	A	9/1997	Klearman et al.	
5,681,269	A	10/1997	Basaj et al.	
5,685,830	A	11/1997	Bonutti	
5,749,840	A	5/1998	Mitchell et al.	
5,755,679	A	5/1998	Selner et al.	
5,761,834	A	6/1998	Grim et al.	
5,772,619	A	6/1998	Corbett	
5,778,565	A	7/1998	Holt et al.	
5,788,659	A	8/1998	Haas	
5,792,084	A	8/1998	Wilson et al.	
5,820,577	A	10/1998	Taylor	
5,823,975	A	10/1998	Stark et al.	
5,833,639	A	11/1998	Nunes et al.	
5,839,139	A	11/1998	Fink	
5,848,979	A	12/1998	Bonutti et al.	
5,865,773	A	2/1999	Koledin	
5,882,320	A	3/1999	Peterson	
5,882,323	A	3/1999	Belkin	
5,919,148	A	7/1999	Marko et al.	
5,929,782	A	7/1999	Stark et al.	
5,940,992	A	8/1999	Darby	
5,943,705	A	8/1999	Sink	
5,980,435	A	11/1999	Joutras et al.	
6,001,075	A	12/1999	Clemens et al.	
6,007,500	A	12/1999	Quintinskie, Jr.	
6,021,780	A	2/2000	Darby	
6,027,468	A	2/2000	Pick	
6,053,169	A	4/2000	Hunt	
6,059,576	A	5/2000	Brann	
6,093,162	A	7/2000	Fairleigh et al.	
6,099,489	A	8/2000	Herzberg et al.	
6,113,562	A	9/2000	Bonutti et al.	
6,142,964	A	11/2000	Gilmour	
6,142,965	A	11/2000	Mathewson	
6,155,994	A	12/2000	Hubbard et al.	
6,179,747	B1	1/2001	Kelley	
6,179,800	B1	1/2001	Torrens	
6,184,797	B1	2/2001	Stark et al.	
6,228,044	B1	5/2001	Jensen et al.	
6,267,742	B1	7/2001	Krivosha et al.	
6,296,595	B1	10/2001	Stark et al.	
6,371,123	B1	4/2002	Stark et al.	
6,384,755	B1	5/2002	Hayden	
6,409,691	B1	6/2002	Dakin et al.	
6,436,058	B1	8/2002	Krahner et al.	
6,485,447	B1	11/2002	Lavery et al.	
6,502,577	B1	1/2003	Bonutti	
6,503,213	B2	1/2003	Bonutti	
6,509,659	B1	1/2003	Carroll et al.	
6,572,571	B2	6/2003	Lowe	
6,575,926	B2	6/2003	Bonutti	
6,599,255	B2	7/2003	Zhang	
6,599,263	B1	7/2003	Bonutti et al.	
6,637,429	B2	10/2003	Mundrick et al.	
6,682,497	B2	1/2004	Jensen et al.	
6,743,187	B2	6/2004	Solomon	
6,770,047	B2	8/2004	Bonutti	
6,890,285	B2	5/2005	Rahman et al.	
6,921,377	B2	7/2005	Bonutti	
6,929,616	B2	8/2005	Bonutti et al.	
6,958,048	B2	10/2005	Bonutti	
6,974,431	B2	12/2005	Jensen	
7,112,179	B2	9/2006	Bonutti et al.	
7,182,738	B2	2/2007	Bonutti et al.	
7,204,814	B2	4/2007	Peles	
7,306,573	B2	12/2007	Bonutti	
7,404,804	B2	7/2008	Bonutti	
7,473,234	B1	1/2009	Weltner et al.	
7,517,330	B2	4/2009	Deharde et al.	
2001/0047209	A1	11/2001	Solomon	
2002/0029784	A1	3/2002	Stark	
2002/0183655	A1	12/2002	Zhang	
2004/0153010	A1	8/2004	Bonutti	
2004/0215120	A1	10/2004	Jensen	
2005/0197605	A1	9/2005	Bonutti et al.	
2006/0036205	A1	2/2006	Bonutti	
2007/0038161	A1	2/2007	Bonutti et al.	
2007/0055190	A1	3/2007	Bonutti et al.	
2007/0100267	A1	5/2007	Bonutti et al.	
2007/0135738	A1	6/2007	Bonutti et al.	
2007/0197605	A1	8/2007	Glombik et al.	
2007/0219475	A1	9/2007	Bonutti et al.	
2007/0219476	A1	9/2007	Bonutti et al.	
2008/0091132	A1	4/2008	Bonutti	
2008/0188356	A1	8/2008	Bonutti	

FOREIGN PATENT DOCUMENTS

DE	405327		10/1924
DE	2829562	A1	1/1980
DE	8806231	U	6/1988
EP	0181688		5/1983
EP	0181668	A1	5/1986
EP	0380060		8/1990
EP	0510840		10/1992
FR	2661333		10/1991
JP	4261657	A	9/1992
JP	2001087296		4/2001
SU	1158195	A1	5/1985
SU	1426580	A1	9/1988
SU	1671296	A1	8/1991
WO	8804543		6/1988
WO	2004007314	A1	1/2004
WO	2005086741	A2	9/2005

(56) **References Cited**

FOREIGN PATENT DOCUMENTS

WO	2007051168	A2	5/2007
WO	2007109638	A2	9/2007
WO	2008036895	A2	3/2008

OTHER PUBLICATIONS

Smith & Nephew Donjoy; Specifications, Quadrant Shoulder Brace; http://www.shoulder.com/quadspec.htm; Jun. 5, 1998; p. 1.

Smith & Nephew Donjoy; UltraSling; http://www.shoulder.com/ultra.htm; Jun. 5, 1998; p. 1.

Neporent et al.; Weight Training for Dummies; 1997; pp. 3.

Dynasplint Systems, Inc.; Practitioner Information for Dynasplint LPS Orthosis—Knee Extension; pp. 6.

UE Tech; Technology Meeting Human Needs; Rehabilitation Catalog vol. 7; pp. 28.

Taber's Cyclopedic Medical Dictionary 16th Edition; 1989; definition of "distraction"; pp. 2.

* cited by examiner

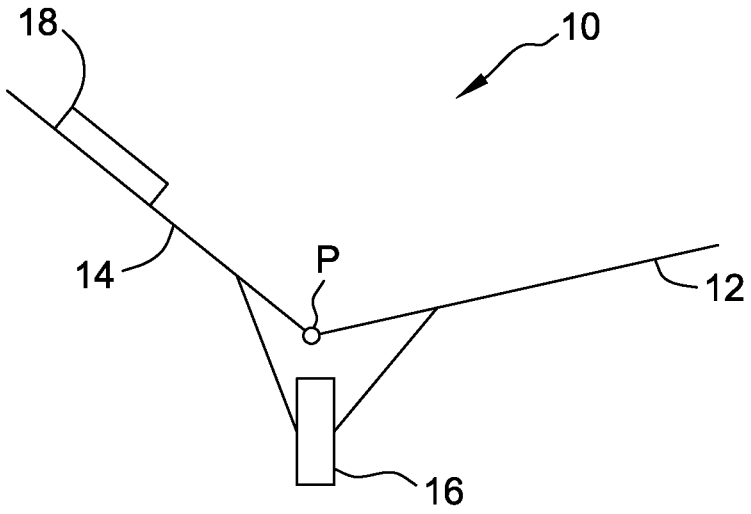

FIG. 1A

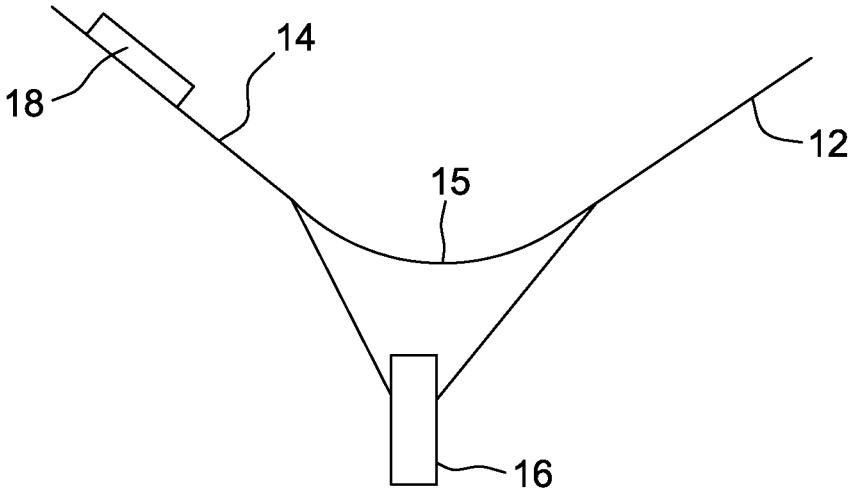

FIG. 1B

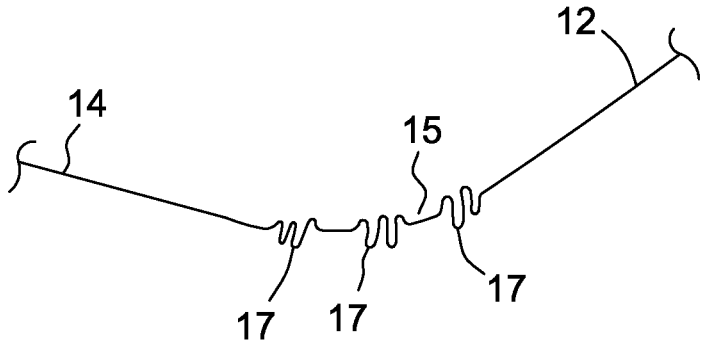

FIG. 1C

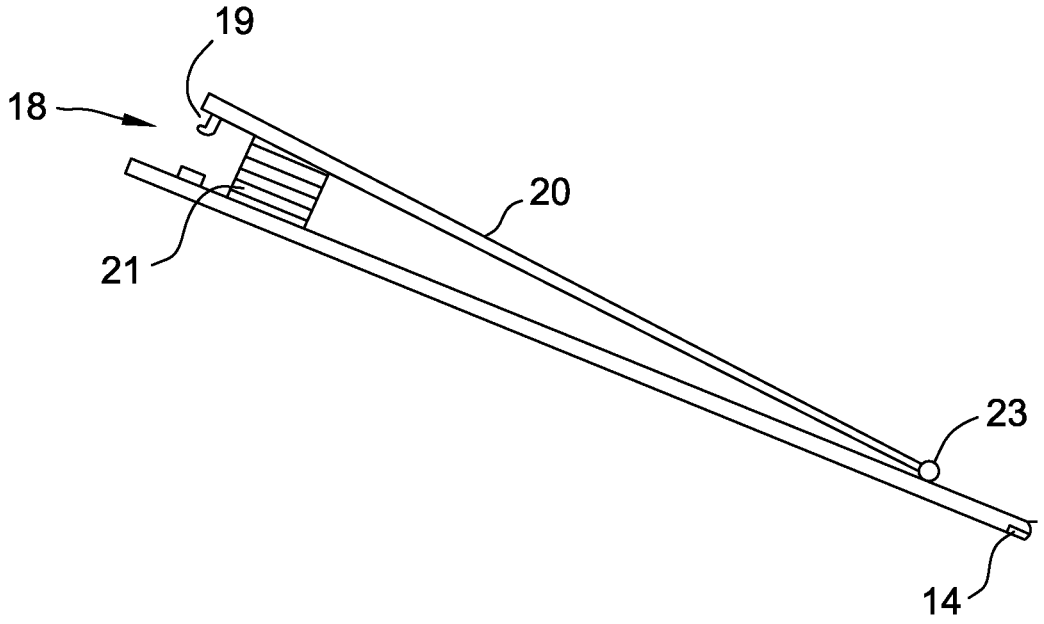

FIG. 2A

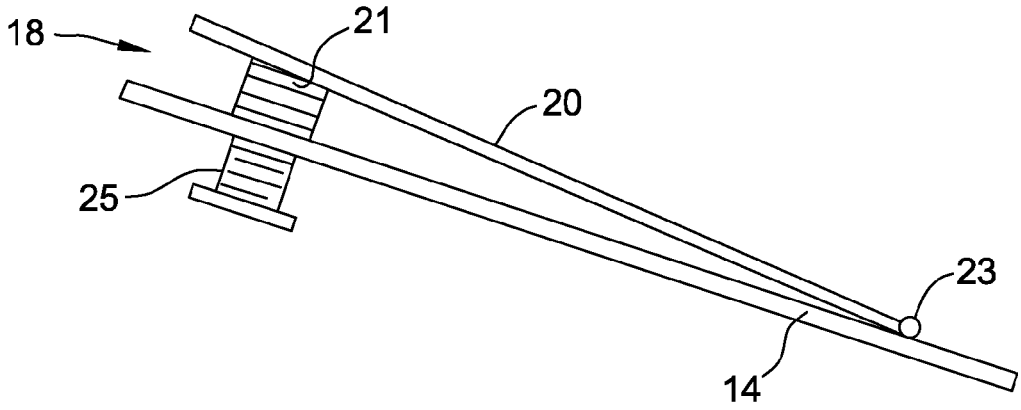

FIG. 2B

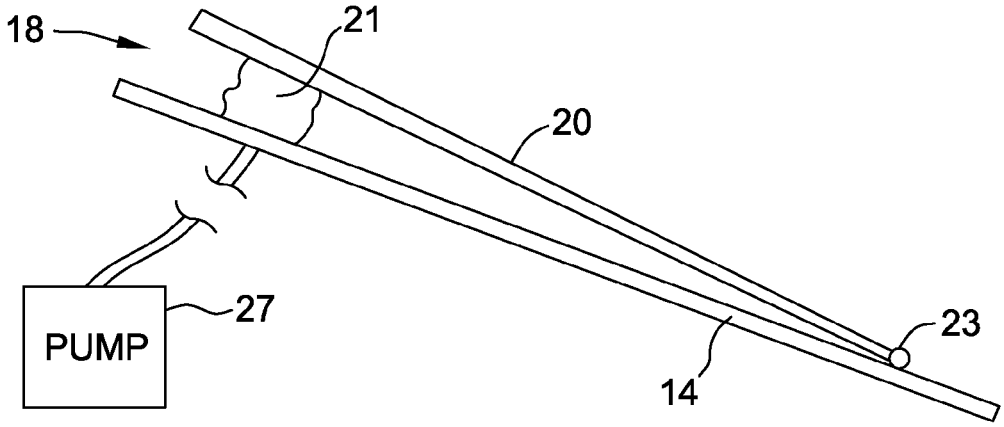

FIG. 2C

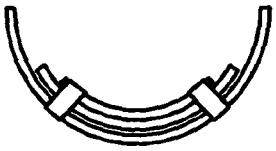

FIG. 3A

FIG. 3B

FIG. 3C

FIG. 3D

FIG. 3E

FIG. 3F

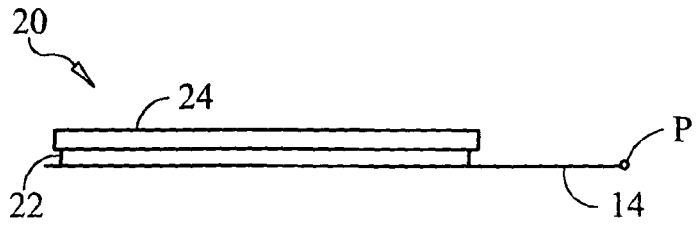

FIG. 4

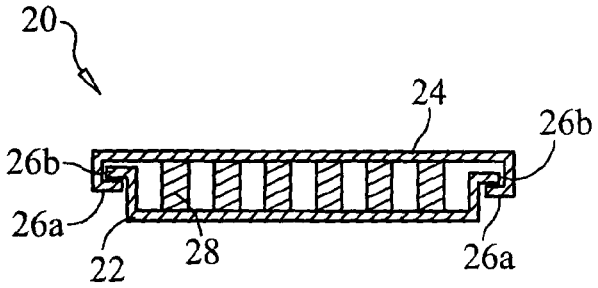

FIG. 5A

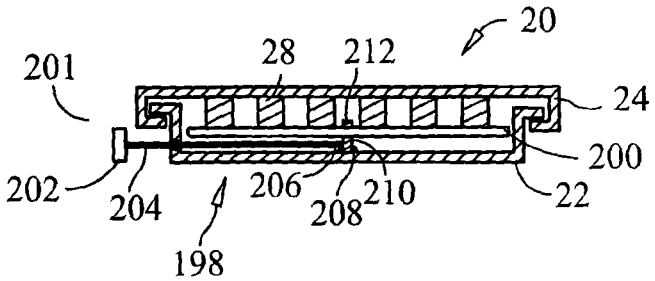

FIG. 5B

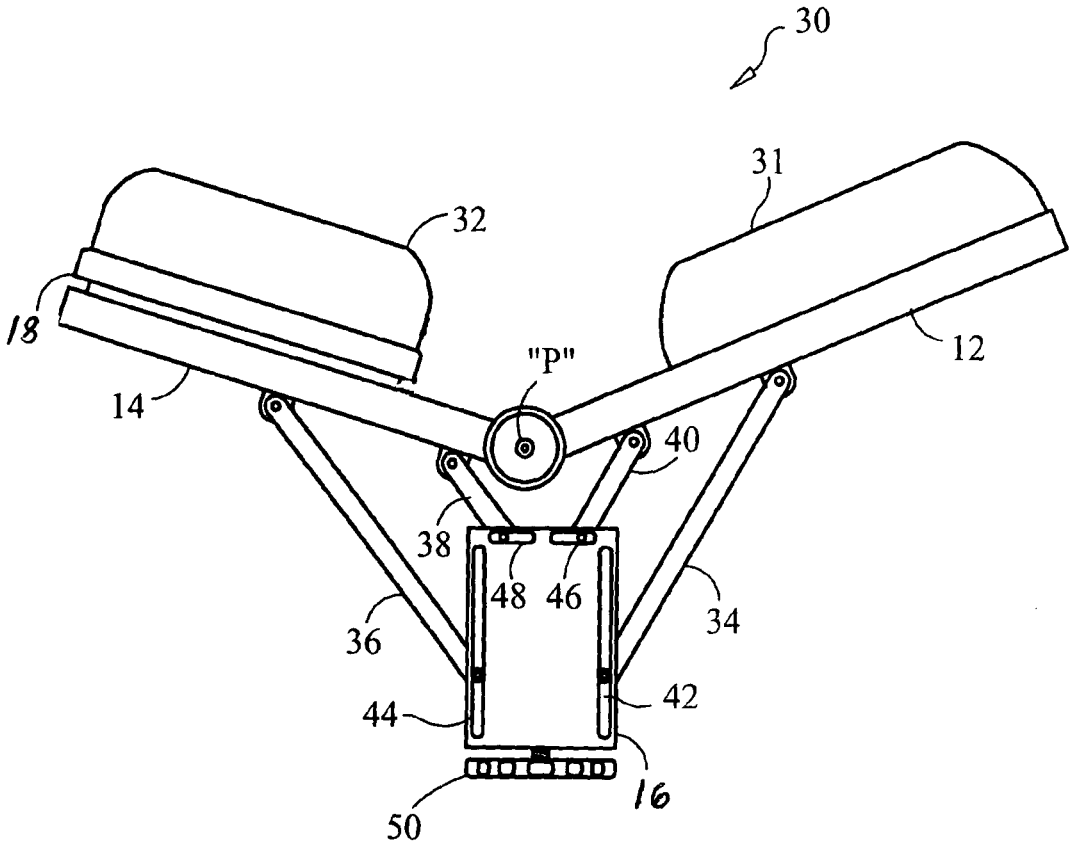

FIG. 6

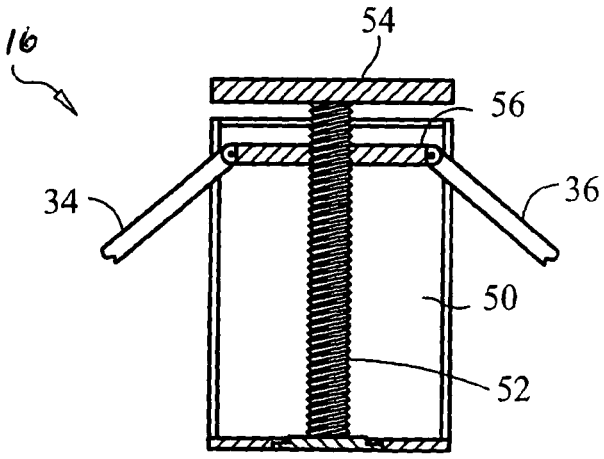

FIG. 7

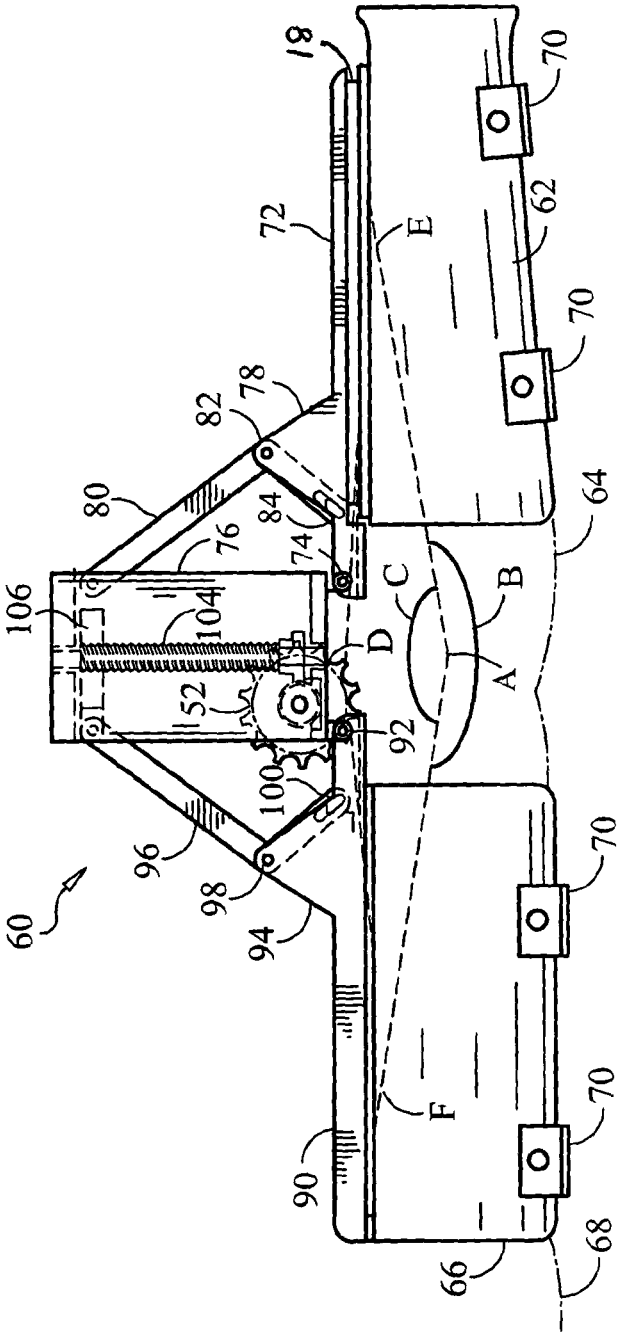
18
70
72
E
62
70
78
82
80
84
76
74
64
106
104
C
B
D
A
52
92
100
96
98
94
60
70
F
70
90
66
68

FIG. 8

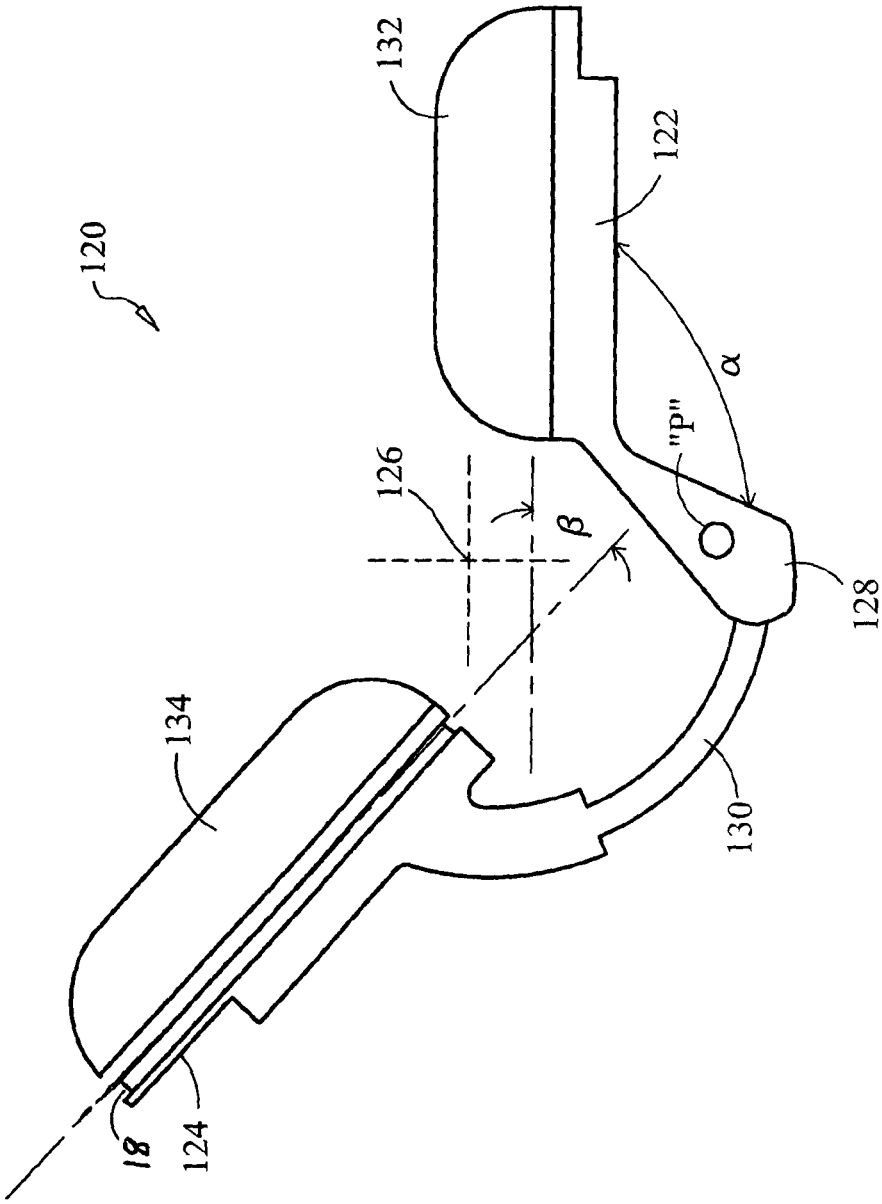

FIG. 9

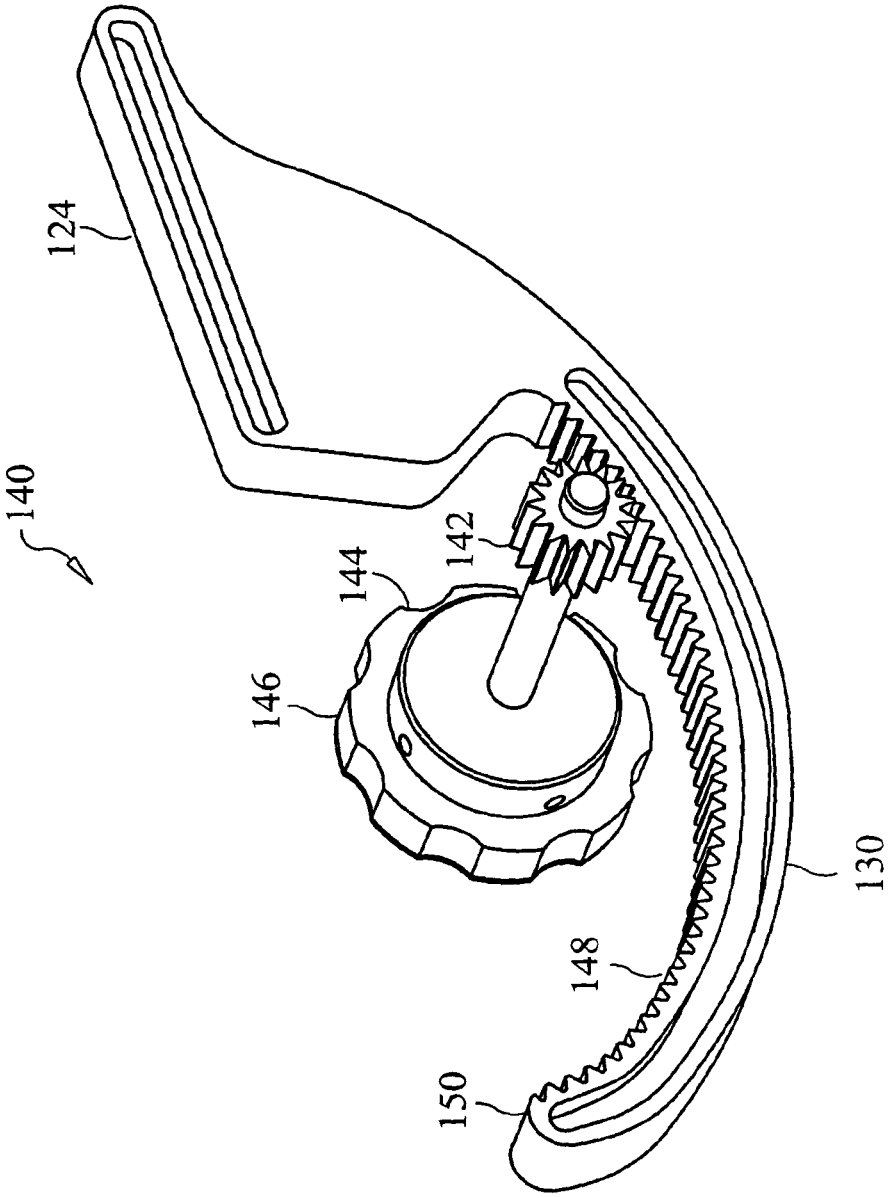

FIG. 10

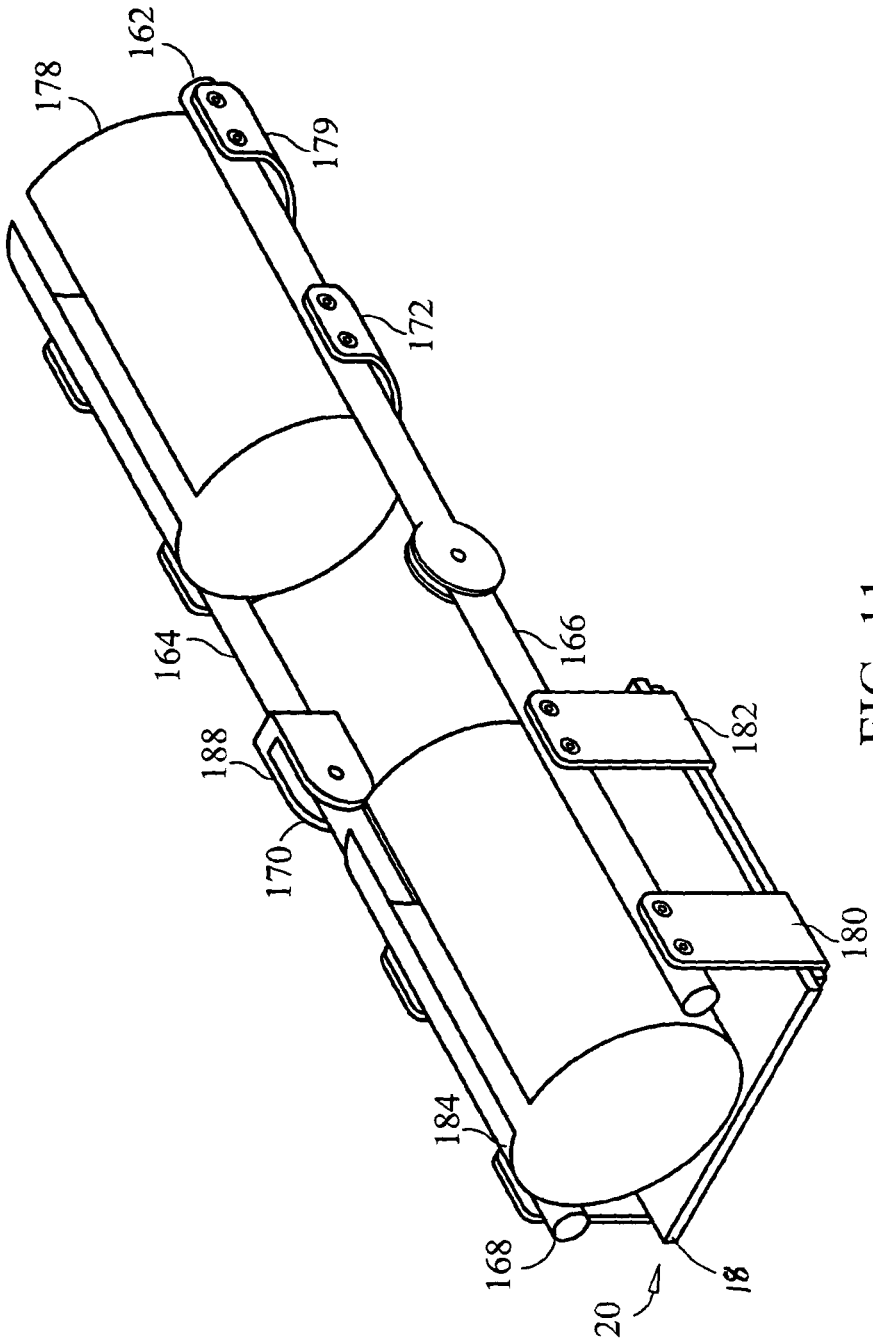

FIG. 11

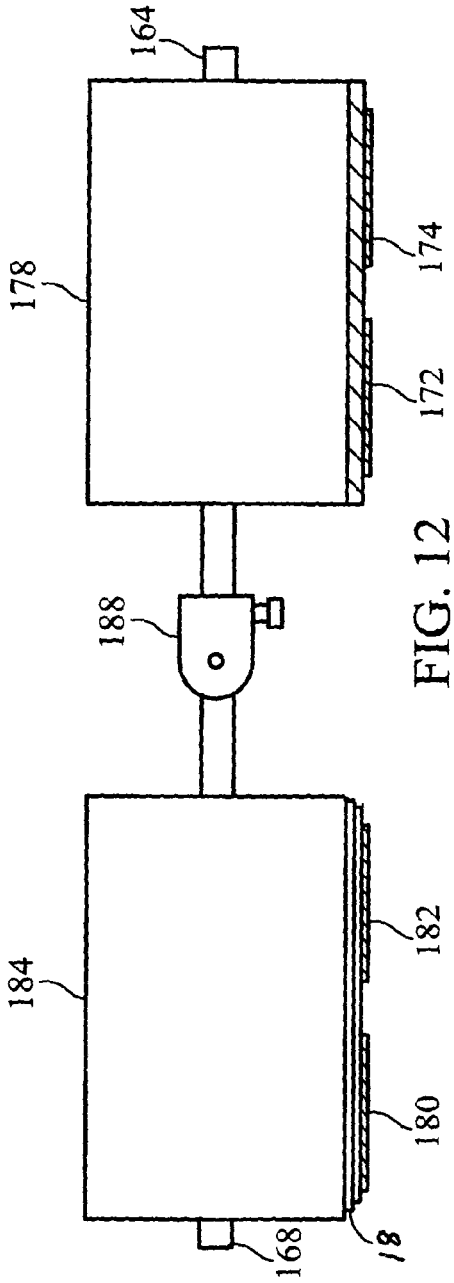
164
178
174
172
188
184
182
180
168
18

FIG. 12

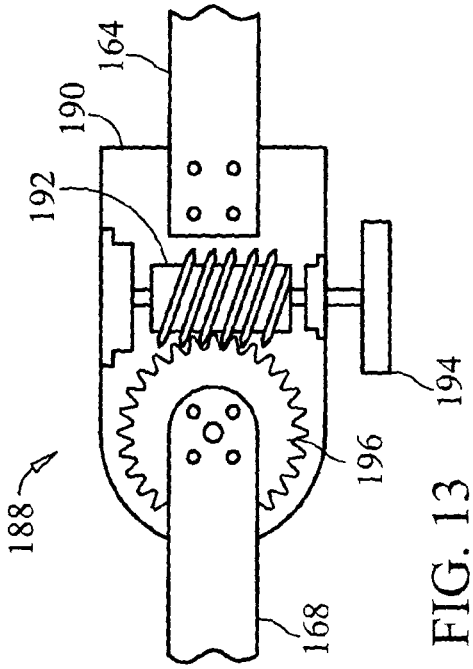
164
190
192
188
194
196
168

FIG. 13

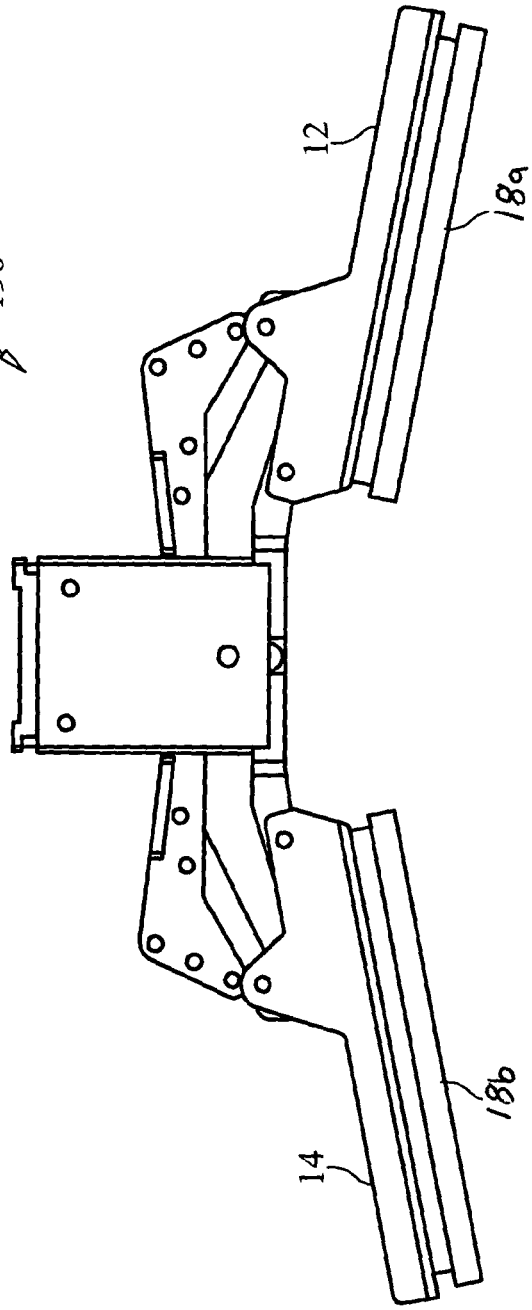

FIG. 14

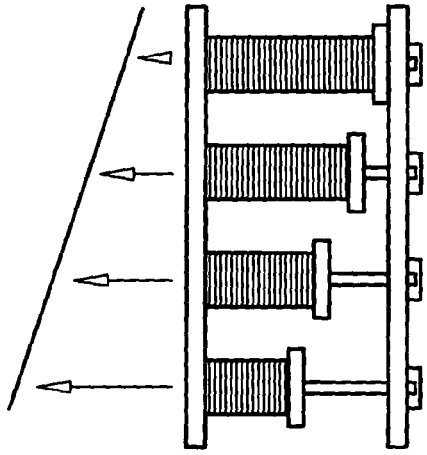

FIG. 15B

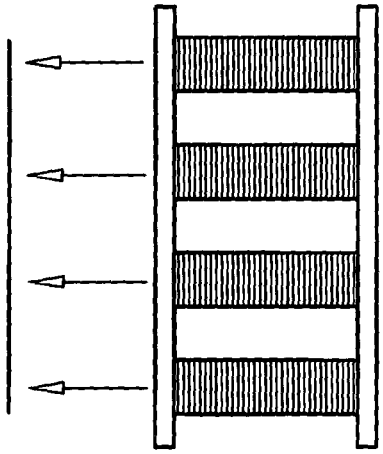

FIG. 15A

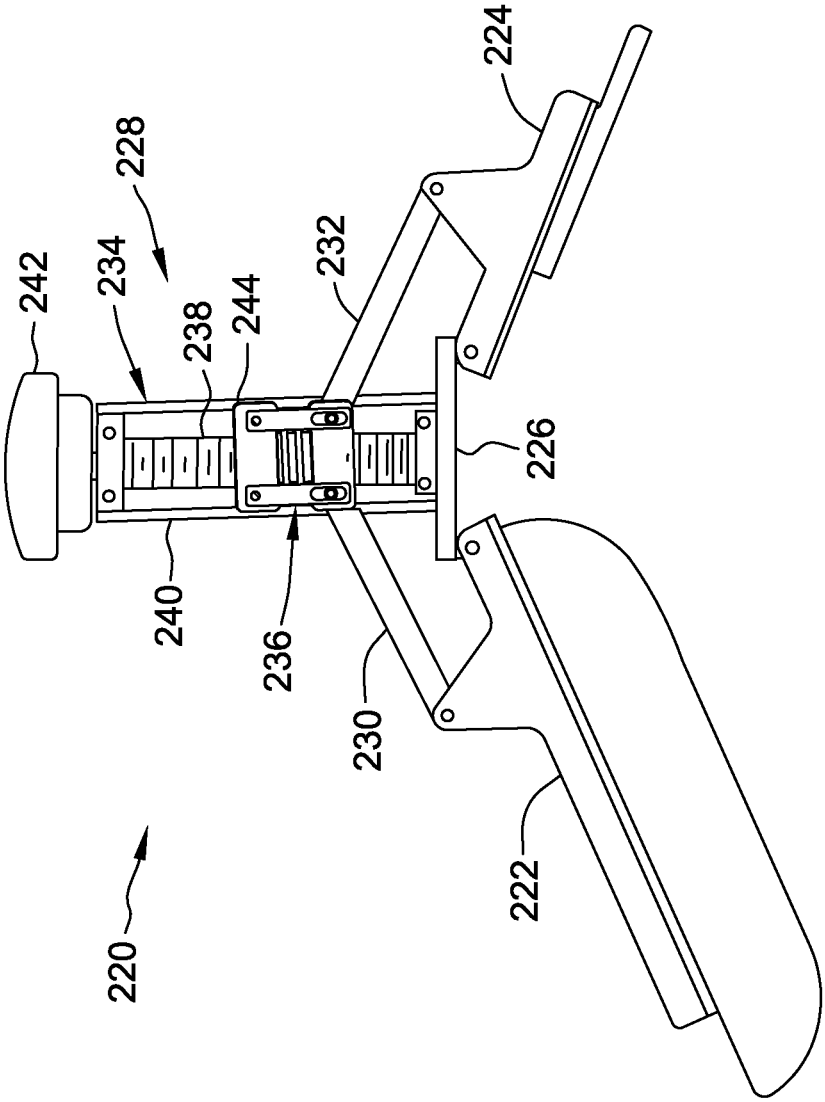

FIG. 16

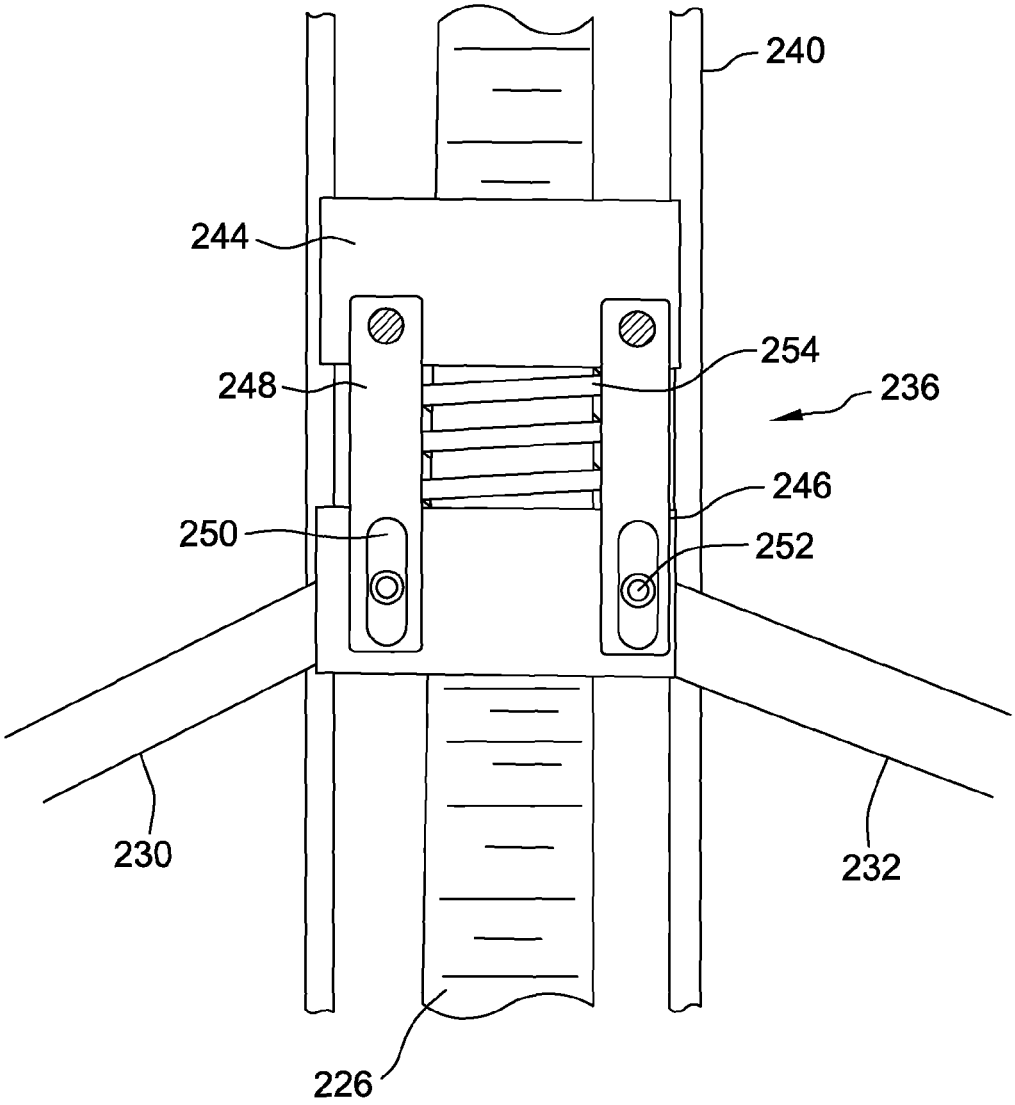

FIG. 17

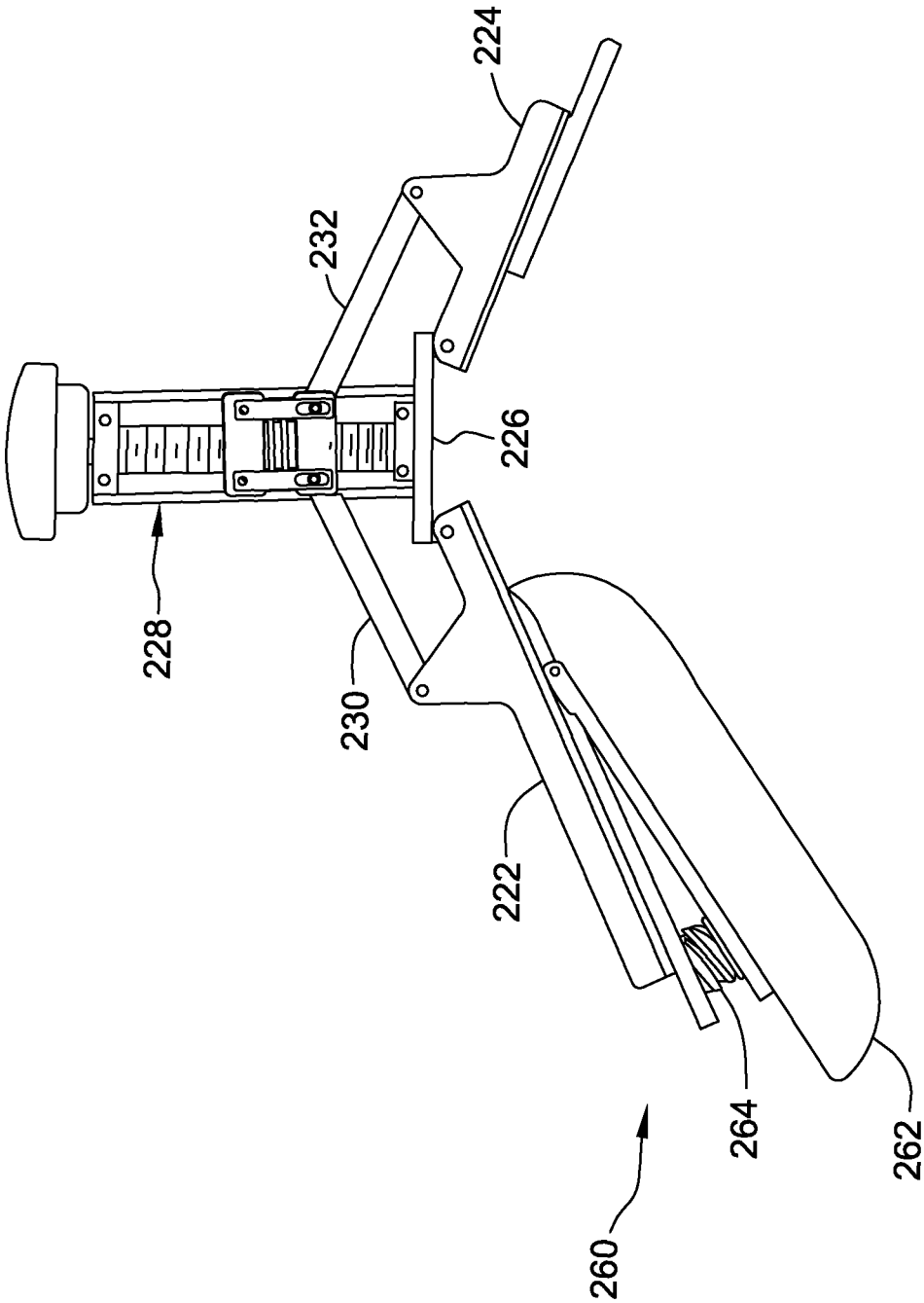

FIG. 18

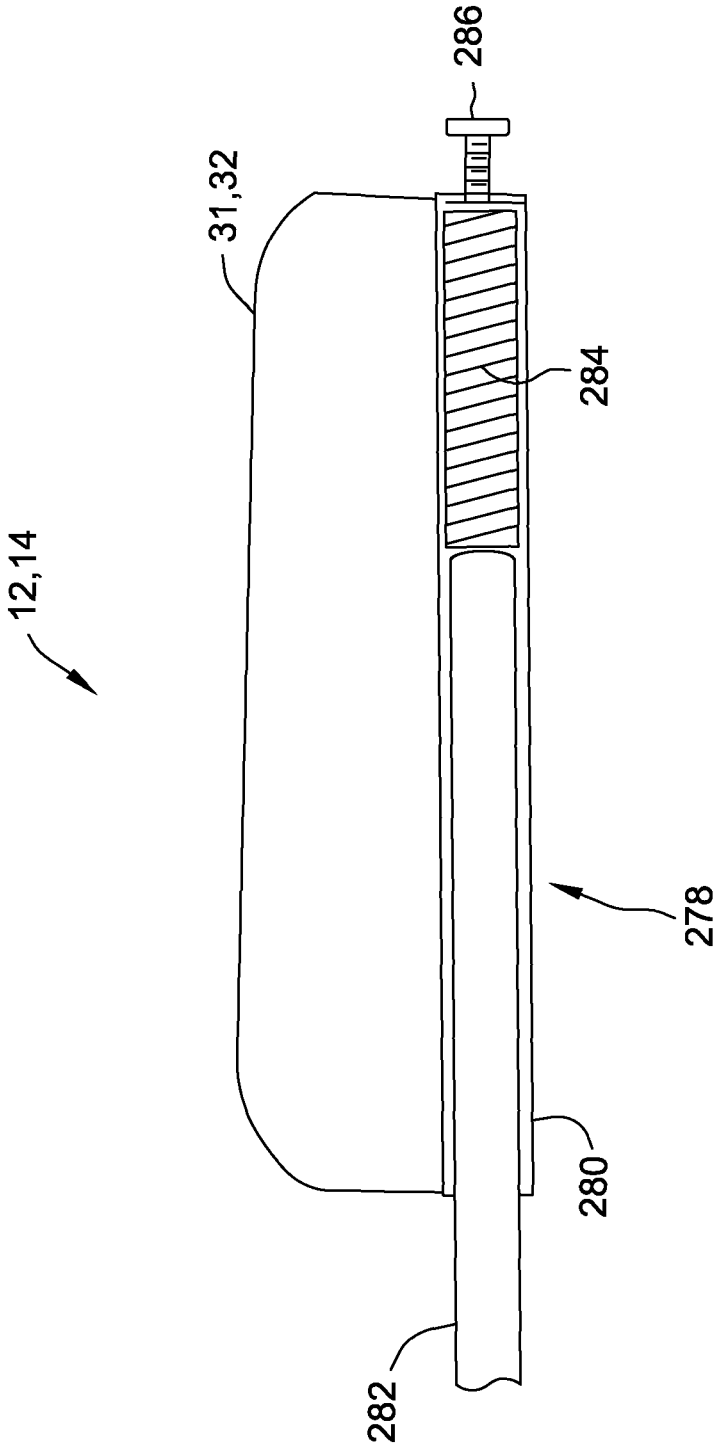

FIG. 19

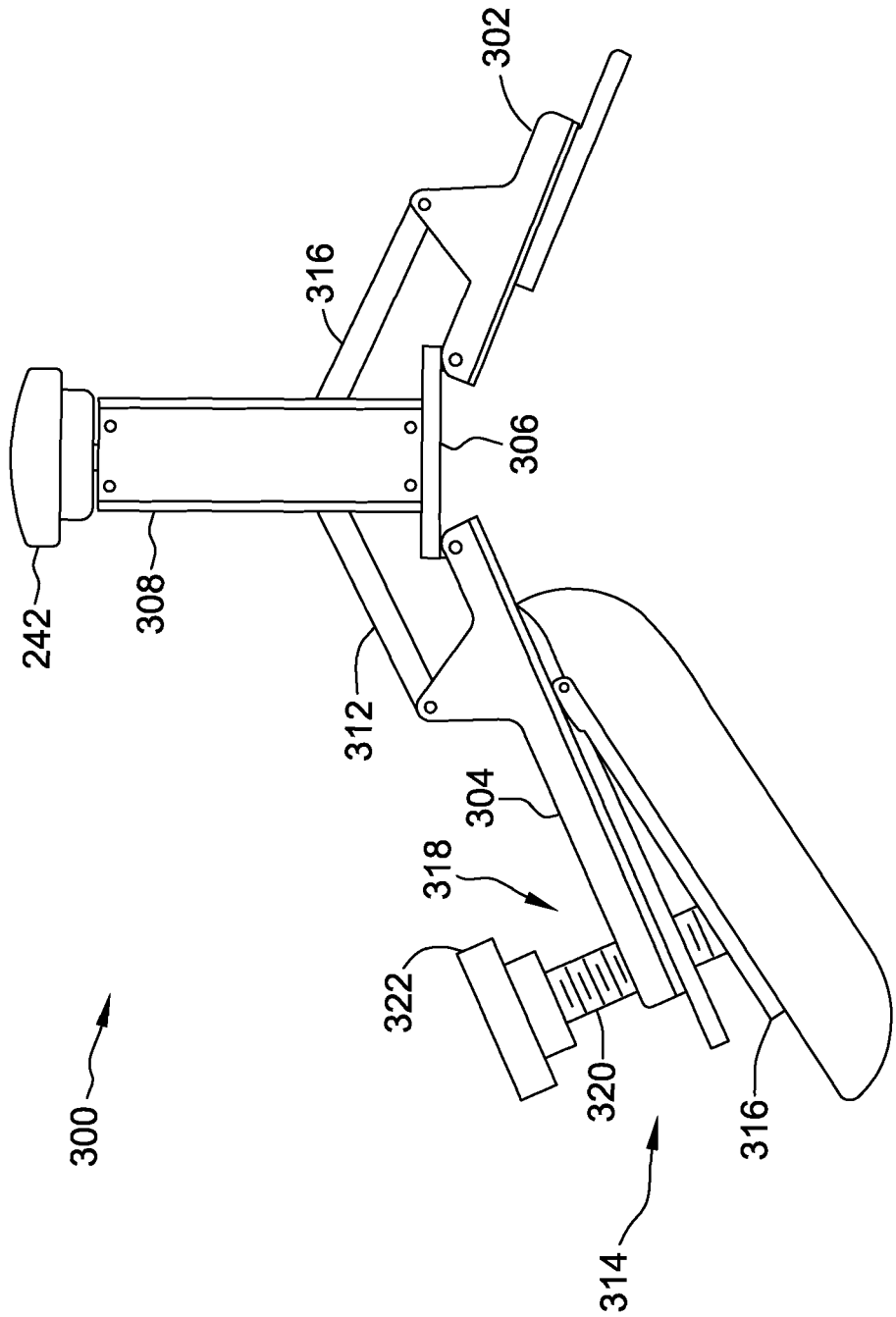

FIG. 20

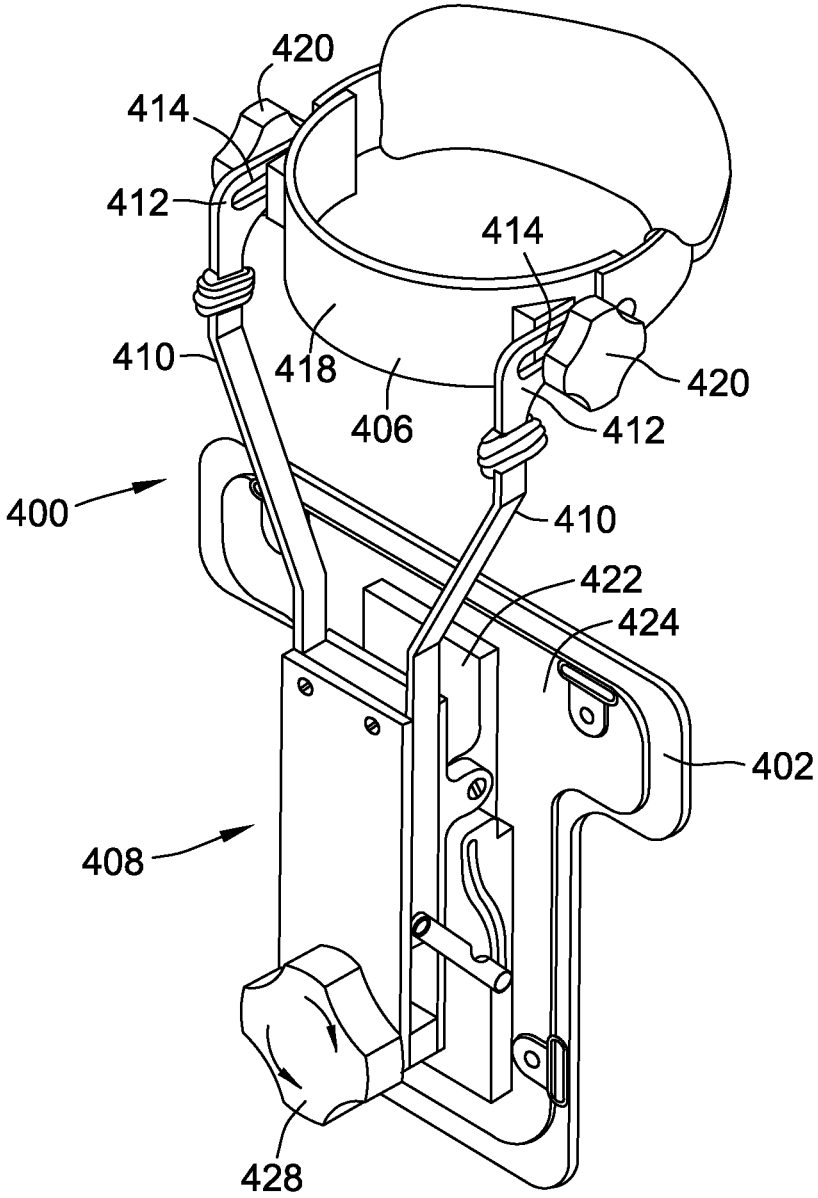

FIG. 21

RANGE OF MOTION SYSTEM

CROSS REFERENCE TO RELATED APPLICATION

This patent application is a divisional application of U.S. patent application Ser. No. 11/203,516 filed on Aug. 12, 2005, which issued as U.S. Pat. No. 8,012,108.

FIELD OF THE INVENTION

The present invention relates to an adjustable orthosis for stretching tissue in the human body. In particular, the present invention relates to an adjustable orthosis which utilizes the principles of stress relaxation and creep for stretching tissue such as ligaments, tendons or muscles around a joint during flexion or extension of the joint.

BACKGROUND OF THE INVENTION

In a joint, the range of motion depends upon the anatomy and condition of that joint and on the particular genetics of each individual. Many joints primarily move either in flexion or extension, although some joints also are capable of rotational movement in varying degrees. Flexion is to bend the joint and extension is to straighten the joint; however, in the orthopedic convention some joints only flex. Some joints, such as the knee, may exhibit a slight internal or external rotation during flexion or extension. Other joints, such as the elbow or shoulder, not only flex and extend but also exhibit more rotational range of motion, which allows them to move in multiple planes. The elbow joint, for instance, is capable of supination and pronation, which is rotation of the hand about the longitudinal axis of the forearm placing the palm up or the palm down. Likewise, the shoulder is capable of a combination of movements, such as abduction, internal rotation, external rotation, flexion and extension.

Most people do not appreciate the complexity of joint motion until something goes wrong, such as when an injury results in lost range of motion. When a joint is injured, either by trauma or by surgery, scar tissue can form or tissue can contract and consequently limit the range of motion of the joint. For example, adhesions can form between tissues and the muscle can contract itself with permanent muscle contracture or tissue hypertrophy such as capsular tissue or skin tissue. Lost range of motion may also result from trauma such as excessive temperature (e.g., thermal or chemical burns) or surgical trauma so that tissue planes which normally glide across each other may become adhered together to markedly restrict motion. The adhered tissues may result from chemical bonds, tissue hypertrophy, proteins such as Actin or Myosin in the tissue, or simply from bleeding and immobilization. It is often possible to mediate, and possibly even correct this condition by use of a range-of-motion (ROM) orthosis, but the longer the period of stiffness or loss of motion the greater the time interval and the force required to regain lost range of motion. Therefore, it is beneficial to treat the tissue or joint as early as possible. For example, a ROM orthosis may be applied immediately after surgery or as soon as the stiffness problem is diagnosed.

ROM orthoses are used during physical rehabilitative therapy to increase the range-of-motion of a joint. Additionally, they also may be used for tissue transport, bone lengthening, stretching of skin or other tissue, tissue fascia, and the like. When used to treat a joint, the device typically is attached on opposite members of the joint so that is can apply a force to move the joint in opposition to the contraction.

A number of different configurations and protocols may be used to increase the range of motion of a joint. For example, stress relaxation techniques may be used to apply variable forces to the joint or tissue while in a constant position. "Stress relaxation" is the reduction of forces, over time, in a material that is stretched and held at a constant length. Relaxation occurs because of the realignment of fibers and elongation of the material when the tissue is held at a fixed position over time. Treatment methods that use stress relaxation are serial casting and static splinting. One example of devices utilizing stress relaxation is the Joint Active System, which uses a rack and pinion gear to move and hold the joint in a constant position.

Sequential application of stress relaxation techniques, also known as Static Progressive Stretch ("SPS") uses the biomechanical principles of stress relaxation to restore range of motion (ROM) in joint contractures. SPS is the incremental application of stress relaxation--stretch to position to allow tissue forces to drop as tissues stretch, and then stretching the tissue further by moving the device to a new position--repeated application of constant displacement with variable force. In an SPS protocol, the patient is fitted with an orthosis about the joint. The orthosis is operated to stretch the joint until there is tissue/muscle resistance. The orthosis maintains the joint in this position for a set time period, for example five minutes, allowing for stress relaxation. The orthosis is then operated to incrementally increase the stretch in the tissue and again held in position for the set time period. The process of incrementally increasing the stretch in the tissue is continued, with the pattern being repeated for a maximum total session time, for example 30 minutes. The protocol can be progressed by increasing the time period, total treatment time, or with the addition of sessions per day. Additionally, the applied force may also be increased.

Exemplary orthoses that utilize the stress relaxation and/or SPS protocols include, but are not limited to, those described in U.S. Pat. No. 6,921,377 ("Finger Orthosis"), U.S. Pat. No. 6,770,047 ("Method of using a neck brace"), U.S. Pat. No. 6,599,263 ("Shoulder Orthosis"), U.S. Pat. No. 6,113,562 ("Shoulder Orthosis"), U.S. Pat. No. 6,503,213 ("Method of using a neck brace"), U.S. Pat. No. 6,502,577 ("Finger Orthosis"), U.S. Pat. No. 5,848,979 ("Orthosis"), U.S. Pat. No. 5,685,830 ("Adjustable Orthosis Having One-Piece Connector Section for Flexing"), U.S. Pat. No. 5,611,764 ("Method of Increasing Range of Motion"), U.S. Pat. No. 5,503,619 ("Orthosis for Bending Wrists"), U.S. Pat. No. 5,456,268 ("Adjustable Orthosis"), U.S. Pat. No. 5,453,075 ("Orthosis with Distraction through Range of Motion"), U.S. Pat. No. 5,395,303 ("Orthosis with Distraction through Range of Motion"), U.S. Pat. No. 5,365,947 ("Adjustable Orthosis"), U.S. Pat. No. 5,285,773 ("Orthosis with Distraction through Range of Motion"), U.S. Pat. No. 5,213,095 ("Orthosis with Joint Distraction"), and U.S. Pat. No. 5,167,612 ("Adjustable Orthosis"), and U.S. Publication No. 20040215111 ("Patient monitoring apparatus and method for orthosis and other devices"), all to Bonutti and herein are expressly incorporated by reference in their entirety. It should be noted that the SPS protocol is disclosed in a number of the above-identified patents. It should be further noted that the mark STATIC PROGRESSIVE STRETCH COMPANY is a registered trademark of Joint Active Systems, Inc (Effingham, Ill.).

Another treatment protocol uses principles of creep to apply a constant force over variable displacement. In other words, techniques and devices utilizing principles of creep involve continued deformation with the application of a fixed load. For tissue, the deformation and elongation are continuous but slow (requiring hours to days to obtain plastic defor-

mation), and the material is kept under a constant state of stress. Treatment methods such as traction therapy and dynamic splinting are based on the properties of creep.

One potential disadvantage of using a static load, however, is that the amount of force needed to effect tissue stretching or creep may change over time. For instance, while a 10 lb force may initially provide desirable results in the beginning of the treatment protocol, it may be insufficient after the tissue has begun to stretch. Likewise, the amount of force needed in the beginning of the treatment protocol may be too much force for use in later stages of the protocol.

Exemplary orthoses utilizing the creep protocol include U.S. Pat. Nos. 5,167,612, 5,365,947, and 5,456,268 entitled "Adjustable Orthosis," and U.S. Pat. No. 5,685,830 entitled "Adjustable Orthosis having one-piece connector section for flexing" all to Bonutti; U.S. Pat. No. 6,413,231, entitled "Device To Assist In Therapy Of Patient Who Has Limited Jaw Opening;" U.S. Pat. No. 5,645,521, entitled "Shoulder Physical Therapy Device;" U.S. Pat. No. 5,070,868, entitled "Adjustable Splint;" and U.S. Pat. No. 4,947,835, entitled "Adjustable splint assembly;" all to assigned to Dynasplint System Inc. and all of which herein are expressly incorporated by reference in their entirety. Another example of orthoses utilizing the creep protocol include U.S. Pat. No. 5,472, 410 to Hammersly, entitled "Adjustable Flexion and Extension Joint Orthoses," and U.S. Pat. No. 5,437,619 to Malewicz et al., entitled "Range-of-Motion Splint with Eccentric Spring," both of which are expressly incorporated by reference in their entirety.

In the past, treatment protocols and related devices utilized either stress relaxation or creep, but not both.

SUMMARY OF THE INVENTION

The present invention is directed to devices and methods of using a combination of stress relaxation and creep protocols to treat contractures. Without being bound to a particular theory, it is believed that combining these loading conditions, such as by applying them in a Static Progressive Stretch mode, may reduce the overall treatment time or may improve the overall amount of tissue stretch achieved.

One embodiment of the invention relates to a device for stretching tissue around a joint between two pivotable or rotatable body portions near a joint. The device has two arm members that are connected to the body portions near the joint. A drive assembly is used to move one arm member relative to the other so that the arm can be moved, for instance, from a first position to a second position. The drive assembly also may be capable of moving the arm to a third, fourth, or even more positions or configurations.

A force application assembly associated with one of the arm members then imparts forces to one of the body portions. The force application assembly may be interposed between an arm member and body portion, and may include one or more springs, such as a linear spring, leaf spring, helical spring, torsional spring, or the like, that help impart forces on the patient's body. Alternatively, the force application assembly may use a fluid bladder or have resilient material that imparts forces on the body.

The force application also could be dynamic tension. The dynamic tension could be a known spring which can have adjustable control, vary the force, could have a control knob or could be electrically controlled or could be controlled via sensor. Springs and other components used in the present invention may be formed of low-cost polymeric materials so that all or part of the device may be designed to be disposable. In addition, the force application assembly may have an adjustable controllable dynamic system that allows electrical feedback or compliance monitoring of the system. Some examples of feedback or monitoring systems that may be used with the invention are described in U.S. Publication No. 20040215111 entitled "Patient Monitoring Apparatus and Method for Orthosis and Other Devices" to Bonutti et al., the entirety of which is incorporated by reference.

The forces imparted to the body may be substantially constant, or alternatively may vary in degree, force profile, or duration. The device may hold the second arm in any of its positions for a predetermined period of time, until a desired amount of tissue stretch relaxation or creep is achieved, or until some other parameter is met. In some embodiments, one or more cuffs are used to attach one or more arm members to the patient's body. Depending on the desired treatment, a cuff and force application assembly may be configured to impart torsional forces on one of the body portions instead of, or in addition to, imparting bending forces. Axial forces may also be applied either alone or in combination with other types of forces.

The invention also is directed to methods of increasing the range of motion on connective tissue between first and second body portions interconnected by a joint. In particular, one embodiment of the invention involves connecting a first and second arm member with a first and second body portion, respectively. One of the arm members may then be moved from a first position to a second position, utilizing the principles of stress relaxation to stretch the tissue about the joint. While in this second position, a force may be imparted on a body member to urge it to move even further than the second position, utilizing the principles of creep to further stretch the tissue about the joint. This force may be applied throughout a treatment interval, or may vary in degree, force profile, or duration. Some embodiments involve moving the body member to third, fourth or even more positions. These multiple positions may gradually increase in a particular direction or range to account for stretching of the body tissue.

BRIEF DESCRIPTION OF THE DRAWINGS

A more complete understanding of the present invention, and the attendant advantages and features thereof, will be more readily understood by reference to the following detailed description when considered in conjunction with the accompanying drawings wherein:

FIG. **1**A is a schematic diagram of an orthosis including a drive assembly and a force application assembly;

FIG. **1**B is a schematic diagram of the orthosis of FIG. **1**A including flexible connecting section;

FIG. **1**C is a schematic diagram of the flexible connecting section of FIG. **1**B including an accordion section;

FIG. **2**A is a schematic diagram of a force application assembly of the orthosis of FIG. **1**;

FIG. **2**B is a schematic diagram of an adjustable force application assembly of the orthosis of FIG. **1**

FIG. **2**C is a schematic diagram of another adjustable force application assembly of the orthosis of FIG. **1**

FIGS. **3**A-**3**F depict alternative force elements for use in the force application assembly of FIG. **2**A;

FIG. **4** depicts another force application assembly of the orthosis of FIG. **1**;

FIG. **5**A depicts a sectional view of the force application assembly of FIG. **4**;

FIG. **5**B depicts sectional view of the force application assembly including a force control system;

FIG. **6** depicts an exemplary orthosis;

FIG. **7** depicts a drive mechanism of the orthosis of FIG. **6**;

FIG. **8** depicts another exemplary orthosis;

FIG. **9** depicts a further exemplary orthosis;

FIG. **10** depicts a drive assembly of the orthosis of FIG. **9**;

FIG. **11** depicts an isometric view of a still further exemplary orthosis;

FIG. **12** depicts a partial sectional view of the orthosis of FIG. **11**;

FIG. **13** depicts a sectional view of a drive assembly of the orthosis of FIG. **11**;

FIG. **14** depicts an orthosis including a pair of force application assemblies;

FIGS. **15**A and **15**B depict examples of force profiles that can be applied by the force application assembly

FIG. **16** depicts another orthosis of the present invention;

FIG. **17** depicts a control assembly of the orthosis or FIG. **16**;

FIG. **18** depicts an orthosis of the present invention including a first and second force application assembly;

FIG. **19** depicts a telescoping arm member for the orthosis of the present invention;

FIG. **20** depicts an orthosis of the present invention including multiple drive assemblies; and

FIG. **21** depicts a neck orthosis in accordance with the present invention.

DETAILED DESCRIPTION OF THE INVENTION

The present invention relates to a ROM device for stretching tissue, such as the connective tissue around a joint, between first and second body portions utilizing the principles of stress relaxation and creep. As previously identified, treatment protocols based on principles of creep involve continued tissue movement and deformation under the application of constant loading, while treatment protocols based on principles of stress relaxation involve varying loading and constant displacement. Techniques utilizing principles of creep therefore allow joint position to change over time as tissue stretches in response to the applied load, whereas techniques utilizing stress relaxation maintain a constant joint position while allowing the applied load to vary over time—usually to diminish or lessen as the tissue stretches. Relaxation occurs because of the realignment of fibers and elongation of the material when the tissue is held at a fixed position over time. As explained in greater detail below, the invention also utilizes the principles of Static Progressive Stretch to provide a sequential application of stress relaxation and creep to the treated tissue. Using the following detailed description and examples, skilled artisans will recognize that it is possible to modify currently existing devices to include features of the present invention.

A joint and the first and second body portions can define on one side (the flexor side) of the joint an inner sector which decreases in angle as the joint is flexed (bent) and on the opposite side (the extensor side) of the joint an outer sector which decreases in angle as the joint is extended (straightened). The orthosis of the present invention is affixable to either the flexor or extensor side of the joint for treatment of flexion or extension contractures. In flexion and extension the joint may also exhibit slight internal or external rotations. As noted above, some joints may also be capable of even greater rotation. While the examples discussed herein primarily illustrate aspects of the invention in the context of increasing range of motion for flexion and extension, they also may be used to increase rotational range of motion.

The orthosis includes a drive assembly for moving the second body portion with respect to the first body portion from a first position to a second position. The orthosis fully or at least partially restricts motion of the second body portion in at least one direction (e.g. flexion, extension, or rotation), utilizing the principles of stress relaxation to stretch the tissue around the joint.

The orthosis further comprises a force application assembly that can apply loading to the tissue while the device is in one or more of its angular positions. The force applied by the force application assembly preferably is in a direction where joint or tissue movement is not fully restricted by the drive assembly or other components of the device. As explained below, the force application assembly can provide a constant force to the second body portion, may be capable of permitting adjustment of the force applied to the second body portion, or may be configured to provide a varying force profile across the second body portion. Initially, the force applied by the force application assembly may be less than the force applied by the drive assembly. As the force in the tissue drops, however, the drive assembly force may reduce to a point where the force application assembly provides a greater force on the tissue. The application of the force application assembly force results in a continuous stretching of the tissue around the joint, maintaining, decreasing, or preventing a relaxation of the tissue, utilizing the principles of creep to further stretch the joint tissue. When used together, the drive assembly and force application assembly take advantage of both principles of stress relaxation and creep.

After a set time period, the drive assembly may be used to move the second body portion from the second position to a third position, incrementally stretching the tissue surrounding the joint. Thus, the orthosis may be capable of moving from a first position to one or more other positions to provide different configuration angles of the device. It is contemplated that the drive assembly may be used to incrementally move the second body portion after the expiration of a predetermined time or until completion of the protocol. This approach is different from application of a constant load over a sustained time period.

Alternatively, the orthosis of the present invention can be used to effect rotational movement between bones in a body of a patient. For example, in a wrist joint it may be desirable to stretch viscoelastic body tissue connected with the ulna and radius bones and/or with the humerus in the arm of a patient in order to obtain a greater range of supination or pronation of the hand of the patient. During supination or pronation of a hand of a patient, the ulna and radius bones in the lower portion of the arm of the patient move relative to each other.

The drive assembly of the orthosis may be used to move the radius bones with respect to the ulna from a first position to a second position when in the second position. The orthosis may restrict movement of the radius bones in at least one direction, such as by preventing the radius and ulna from returning to the first position. In this manner, the drive assembly utilizes the principles of stress relaxation to stretch the tissue around the wrist joint. After a set time period, the drive assembly may be used to move the radius bones from the second position to a third position, incrementally stretching the tissue surrounding the wrist joint.

As previously explained, the force application assembly can apply loading to the radius bones while the drive assembly is in one or more positions. This allows the device to utilize the principles of creep to help stretch the tissue. Initially, the force applied by the force application assembly may be less than a force applied by the drive assembly. As the force in the tissue drops, the drive assembly force may reach a point where the force application assembly provides a greater force to the tissue. The forces applied by the force application assembly results in a continuous stretching of the tissue

around the joint during the set time period, maintaining, decreasing, or preventing a relaxation of the tissue.

In addition, the forces applied by the drive assembly and force application assembly may be in substantially the same direction or alternatively may differ. For example, increasing range of motion for a knee may involve applying loading on the joint in substantially the same direction for both assemblies. In contrast, treatment of an ankle, wrist, elbow, or shoulder may involve the drive assembly applying a force to cause flexion or extension while the force application assembly applies rotational forces (or vice versa).

Referring now to the drawing figures in which like reference designators refer to like elements, there is shown in FIG. **1**A schematic representation of the orthosis **10** of the present invention. The orthosis **10** includes a first arm member **12** attachable to a first body portion and a second arm member **14** attachable to a second body portion. In this embodiment, the first and second arms **12**, **14** are pivotally connected to each other at the axis of rotation "P."

Alternatively, as shown in FIG. **1**B the first and second members **12** and **14** can be operatively connected with a living hinge or flexible section **15**. In contrast to a point hinge connection, a flexible section **15** allows for a self centering connection, pivoting the first and second members **12** and **14** about a joint axis, as opposed to a hinge axis. For example, the first and second members **12** and **14** can be connected with a flexible section **15**, such as a bar, which allows bending movement between the first and second members **12** and **14**. The flexible section **15** can include stress risers, allowing for an easing on bending.

Additionally, as shown in FIG. **1**C, the flexible section **15** can include an accordion section **17**, allowing the flexible section **15** to expand and contract as it bends. For complex joints, such as a wrist joint, the flexible section **15** can include multiple accordion sections **17**. The multiple accordion sections **17** allow the device to more closely emulate the joint dynamics.

The flexible section **15** can be made of a flexibly polymeric material, metal, or other biocompatible materials capable of exerting loading when flexed, stretched or compressed. An exemplary orthosis, including a flexible section is disclosed in U.S. Pat. No. 5,685,830 entitled "Adjustable Orthosis having one-piece connector section for flexing" to Bonutti, the contents of which are herein expressly incorporated by reference in their entirety.

Furthermore, the flexible section **15** can be made of a shape memory or reactive material. For example, the flexible section **15** can be made of a shape memory material, where a change in temperature results in a shape or position change of the flexible section **15**. The change in shape of the flexible section **15** can be used to change the position of the first and second arm members **12** and **14**. Alternatively, the change in shape of the flexible section **15** can be used to provide a force to the first and second arm members **12** and **14**.

Similarly, the flexible section **15** can be made of a reactive material, where a change in temperature or an application of energy results in a change in the physical properties of the flexible section **15**. For example, the flexible section **15** can initially be in a rigid form. An electric current can be applied to the flexible section **15**, changing the flexible section **15** from rigid to flexible, allowing movement of the first and second arm members **12** and **14**. Upon positioning the first and second arm members **12** and **14**, the electric current can be discontinued, changing the flexible section **15** from flexible to rigid, securing the position of the first and second arm members **12** and **14**.

A drive assembly **16** is connected to the first and second arm members **12** and **14**, where the drive assembly **16** is operated to apply a force to rotate the first and second arm members **12** and **14** relative to each other about point "P." The drive assembly **16** may be connected to the first and second arm members **12** and **14** on the inner or outer sectors of the orthosis **10**. Alternatively, the drive assembly **18** may be connected to a side portion of the orthosis **10**, along the joint axis **16**, or to other sectors of the orthosis **10**.

The first arm member **12** can be secured to a first body portion of a patient and the second body member **14** can be secured to a second body portion of the patient, where a joint is interposed between the first and second arm members **12** and **14**. The drive assembly **16** is actuated to provide a force to the second arm member **12** with respect to the first arm member **14**, pivoting the second arm member **14** with respect to the first arm member **12** from a first position to a second position. The movement of the first and second arm members **12** and **14** rotates the first and second body portions with respect to each other about the joint axis. The orthosis **10** restricts movement of the second body portion in at least one direction when in the second position, utilizing the principles of stress relaxation to stretch the tissue around the joint.

The drive assembly **16** can further include a locking mechanism. The locking mechanism can be used to secure the position of the second arm member **14** with respect to the first arm member **12**. The locking mechanism can prevent the actuation of the drive assembly **16**, securing the position of first and second arm members **12** and **14**. Alternatively, the locking mechanism can secure the first and second arm members **12** and **14**, preventing an actuation of the drive assembly **16** from moving the first and second arm members **12** and **14**. The locking mechanism can be utilized such that the orthosis **10** can be used as a static splint.

The orthosis **10** further includes a force application assembly **18** connected to the second member **14**. The force application assembly **18** may be positioned between the second member **14** and the second body portion, such that the force application assembly **18** imparts loading forces to the second body portion with respect to the second arm member **14**, utilizing the principles of creep to further stretch the joint tissue. The loading forces may be substantially constant or may vary in degree or duration.

Initially, the force applied by the force application assembly **18** may be less than a force applied by the drive assembly **16**. As the tissue is stretched, however, it may relax and reduce the degree of resistance to the drive assembly position. In turn, the drive assembly force decreases and may reach a point where the force application assembly force exceeds the drive assembly force. The force application assembly **18** can impart a substantially constant force onto the second body portion, or alternatively may vary in degree or duration. The application of the force application assembly force utilizes the principles of creep to continuously stretch the joint tissue during the set time period, thereby maintaining, decreasing, or preventing a relaxation of the tissue.

After a set time period, the drive assembly **16** may be used to move the second arm member **14** with respect to the first arm member **12** from the second position to a third position, incrementally stretching the tissue surrounding the joint. It is contemplated that the drive assembly **12** may be used to incrementally move the second body portion after the expiration of a predetermined time or until completion of the protocol.

The orthosis **10** of the present invention can be connected to the flexor side of the first and second body portions of the joint, which results in a decrease in angle as the joint is flexed

(bent) and an increase in angle as the joint is extended (straightened). Similarly, orthosis **10** of the present invention can be connected to the extensor side of the joint, which results in a decrease in angle as the joint is extended straightened and an increase in angle as the joint is flexed (bent).

In an exemplary use, the orthosis **10** is operated to extend a joint in the following manner. The first arm member **12** is fastened to the first body portion and the second arm member **14** is fastened to the second body portion. The orthosis **10** is attached to the first and second body portions in a first position. The drive assembly **16** is operated to move the second arm member **14** from the first position to a second position, relative to the first arm member **12** by rotating the second body portion about a joint axis. The connective tissue of the joint is consequently stretched. The orthosis **10** is maintained in the second position for a predetermined treatment time, utilizing the principles of stress relaxation to stretch the connective tissue of the joint. As explained above, previous orthoses may allow the tissue to partially relax as the tissue stretches because the devices simply held the body members in a fixed position. In contrast, the present invention further utilizes a force application assembly **18** to apply loading or forces to the second body portion. This application of force prevents a relaxation of the connective tissue of the joint, utilizing the principles of creep to further stretch the connective tissue of the joint. After the expiration of the treatment time, the second arm member **14** may be returned to the first position, relieving the joint. While in one embodiment, the loading or forces applied are substantially constant, they also may gradually increase, decrease, pulse between a first and second amount of force, or be varied in other ways such as described in the examples and embodiments provided herein.

Optionally, the second arm member **14** can be rotated to a third position, further increasing the stretch of the connective tissue of the joint. The second arm member **14** can be rotated at discrete time intervals to incrementally increase the stretch of the joint through the treatment cycle. In each of the movements, the force application assembly **18** provides the substantially constant force to the second body portion, preventing a relaxation of the connective tissue of the joint. After completion of the treatment cycle, the second arm member **14** is returned to the first position relieving the joint.

Referring to FIG. **2**A, there is provided a force application assembly **18** of the present invention. The force application assembly **18** includes an assembly member **20** pivotally connected to the second arm member **14**, such that the assembly member **20** is interposed between the second arm member **14** and the second body portion. One or more force elements **21**, such as a spring, is interposed between the second arm member **14** and the assembly member **20**, where the force element **21** provides a force urging the assembly member **20** away from the second arm member **14**.

The force application assembly **18** can include a lock out element **19**. When engaged, the lock out element **19** secures the assembly member **20** to the second arm member **14**, preventing expansion of the force element **21**. The lock out element **19** permits the optional use of the force element **21** during the protocol or for any position of the device.

Referring to FIG. **2**B, force application assembly **18** can be adjustable, wherein the force applied by the force element **21** can be controlled. The force application assembly **18** can include a threaded member **25** operably connected to the force element **21**. The threaded member **25** can be used to selectively increase or decrease the force applied by the force element **21**.

Other devices may be used in place of the threaded member **25** to vary the force applied by force element **21**. For example, a motor, pressurized bladder, piston, hydraulic or pneumatic system, or other device may be used to vary the force applied. Referring to FIG. **2**C, for example, the adjustable force application assembly **18** can include a bladder force element **21**. The bladder force element **21** is connected to a pump **27**, where the pump can inflate and deflate the bladder force element **21** to selectively increase or decrease the force applied by the bladder force element **21**.

While the force element **21** is representative of one or more springs, it should be understood that the force application assembly **18** can use other devices to impart forces on the assembly member **20**. It is contemplated that the force elements **21** may be any device that can impart forces urging the assembly member **20** to move relative to the second arm member **14**. For instance, referring to FIGS. **3**A-**3**F, the force element can be a leaf spring, a "C" spring, a fluid bladder, and elastic resilient material, or any other related device known in the art.

Additional, non-limiting examples of force elements include pneumatic or hydraulic systems, open cell or closed cell foams, and elastic materials such as rubber, urethanes, plastics, or the like. The force element can further include an adjustable force element to increase or decrease the provide force.

FIGS. **4** and **5**A illustrate an alternative force application assembly **18** of the invention. The force application assembly **18** includes first assembly member **22** connected to the second arm member **14** and a second assembly member **24** slidably positioned over the first assembly member **22**. The first and second assembly members **22** and **24** each include lip portions **26***a* and **26***b*, limiting the range of motion of the second assembly member **24** with respect to the first assembly member **22**. Lip portions **26***a* and **26***b* also may help prevent inadvertent removal of the second assembly member **24** from the first assembly member **22**. Force elements **28** may be disposed between the first and second assembly members **22** and **24** in order to provide a force urging the second assembly member **24** away from the first assembly member **22**.

The force applied to the second assembly member **24** with respect to the first assembly member **22** can be selected based on the therapeutic requirements of a patient. For example, the force elements **30** can be selected to provide a desired force, i.e., 1 lb., 2 lbs., 3 lbs., etc.

In one embodiment, the force applied remains substantially constant during a treatment interval, which, for purposes of this application, is the time during which the device is in use and in a particular configuration or position. Thus, the number of treatment intervals may correspond to the number of different positions or device configurations used in the overall treatment protocol.

The force applied in one treatment interval may differ in degree, profile, or duration of force applied in another treatment interval, although in some cases the applied force may be substantially the same for two or more, or even for all treatment intervals.

The degree of force applied, for example, may be varied from one treatment interval to another, and likewise the degree of force applied may be adjusted depending upon different factors or patient needs. Force elements **28**, for example, may comprise one or more spring elements that, when compressed, impart an outward force on the first and second assembly members. The force elements and assembly members may be configured so that the force members are always partially compressed or deformed, thereby creating a pre-load force that must be overcome in order to move the assembly members closer together. The amount of initial

deflection, and therefore the amount of preloading of the force elements, may be made adjustable by providing a movable plate, washer, screw, or other force adjustment device disposed at least partially between the assembly members.

If a plurality of force members are used, such as by providing several springs distributed along the area of the interior surfaces of the assembly members, more than one force adjustment devices may be used in order to allow even greater control and variation of the forces applied during a treatment interval. For instance, it may be desirable to provide a different degree of force in one region than in another.

Thus, while in some cases it may be desirable to have a relatively uniform force profile as illustrated in FIG. **15**A, it may also be desirable to apply a greater force on one end, side, or region of the device than another, as shown in FIG. **15**B. Additionally, there may be circumstances when it is desirable to apply little, if any, force in one region of the device. For example, the patient may have an injury in part of the treated anatomy, such as bruising, scarring, cuts, stitches, or the like that is sensitive to application of pressure forces.

The adjustment devices may be configured to permit access and adjustment of the force preload and/or profile during a treatment protocol. In this manner, a physician may be able to assess and adjust the imparted forces for any treatment interval.

Additionally, adjustments also may be made during a treatment interval. For example, adjustments may be made during a treatment interval in order to increase or decrease the forces imparted, even though the geometric angle or position of the device remains unchanged. In one example, the initial force imparted at the beginning of a treatment interval may be low, but then increased over time according to a patient's progress or according to a predetermined time schedule. In another example, it may be desirable to initially apply a greater force in order to help accelerate a patient's progress, but then later relieve or reduce the forces applied after achieving a satisfactory degree of stretching or after a predetermined time.

In addition, the force application assembly **18** can include a force control system for control the force applied by the force elements **30**. A pneumatic or hydraulic system, for example, may have controls for the amount of force imparted by any or all of the force elements as well as the force profile and direction of applied forces. Likewise, a servo-mechanical force control system may be used to vary the amount of deflection or preload of spring-like force elements.

Moreover, while the examples and descriptions provided herein illustrate how the invention may be used to treat flexion and extension contractures, the concepts may also be applied to treating contractures limiting rotational range of motion. Thus, the devices described herein also may be configured to increase the rotational range of motion, such as supination or pronation, for a joint in addition to, or instead of, treating bending. For example, a device for treating contractures in a shoulder, elbow, wrist, hip or ankle joint may be configured to help enhance rotational capability of the joint.

Referring to FIG. **5**B, the force application assembly **18** includes a force control system **198** having a first assembly member **22** connected to the second arm member **14** and a second assembly member **24** slidably positioned over the first assembly member **22**. A compression plate **200** is positioned within the second assembly member **24**, where the force elements **28** are disposed between the compression plate **200** and the first assembly member **22**. A drive mechanism **201** is provided to raise and lower the compression plate **200**, compressing or extending the force elements **30** to selectively increase or decrease the substantially constant force.

The drive mechanism **201** may include a knob **202** connected to a shaft **204**, the opposite end of the shaft **204** including a worm drive **206**. The knob **202**, shaft **204**, and worm drive **206** are connected such that a rotation of the knob **202** rotates the worm drive **206**. A threaded member **208** is rotatably mounted to the second assembly member **24** and includes a gear **210** for engaging the worm drive **206**. The gear **210** engages the worm drive **206** such that a rotation of the worm drive **206** results in a rotation of the threaded member **208**. The threaded member **208** is positioned and threaded through a threaded aperture **212** in the compression plated **200**, such that as the threaded member **208** is rotated the compression plate **200** is raised or lowered. In this manner the force elements **30** can be compressed or expanded to selectively change the substantially constant force.

In the previous examples, the force application assembly **18** is disclosed as being interposed between the second arm member **18** and the second body portion, providing a force to the second body portion. However, it is contemplated that the force application assembly **18** can be in other locations or positions, such as adjacent to the drive assembly **16**. Likewise, the force application assembly **18** can include a torsional spring position about the joint axis and interposed between the first and second arm members **12** and **14**. The torsional spring can provide a force to the second arm member **14** with respect to the first arm member **12**, utilizing the principles of creep to further stretch the connective tissue of the joint. Alternatively, the force application assembly **16** can be integrated into the drive assembly.

Referring to FIG. **6**, there is shown an orthosis **30** of the present invention. The orthosis **30** includes first and second arm members **12** and **14** pivotally connected at "P." The first arm member **12** includes a first cuff **31** for attachment to the first body portion. (The term "cuff" as used herein means any suitable structure for transmitting the force of the orthosis to the limb portion it engages.) The second arm member **14** includes the force application assembly **18** and a second cuff **32**, for attachment to the second body portion, wherein the force application assembly **18** is interposed between the second cuff **32** and the second arm **14**, such that the force application assembly **18** can provide the substantially constant force to the second body portion. The cuffs **31** and **32** can include a strap, such as VELCRO straps and foam portions to secure the cuffs **31** and **32** to the body portions.

The drive assembly **16** is operably connected to the first and second arm members **12** and **14**. The drive assembly **16** includes first and second lever arms **34** and **36** pivotally connected to the first and second arm members **12** and **14** and operably connected to a drive mechanism of the drive assembly **16**. Operation of the drive mechanism actuates the lever arms **34** and **36** to move the first and second arm members **12** and **14**. Tracking arms **38** and **40** are pivotally connected to the first and second arm members **12** and **14** and slidably connected to the drive assembly **16**, stabilizing the drive assembly **16** with respect to the first and second arm member **12** and **14**.

Referring to FIG. **7**, a drive mechanism **50** of the drive assembly **16** is provided. The drive mechanism **50** includes a worm **52** rotatably mounted within the drive assembly **16**. A knob **54** is connected to the worm **52**, such that a rotation of the knob **54** rotates the worm **52**. A threaded actuation sleeve **56** is position on the worm **52**, such that as the worm **52** is rotated the threaded sleeve traverses the worm **52**. The first and second lever arms **34** and **36** are pivotally connected to the threaded sleeve **54**. In operation a rotation of the knob **56** results in an actuation of the lever arms **34** and **36**, moving the first and second arm members **12** and **14**.

In an alternative embodiment, the drive assembly **16** for an orthosis **10** in accordance with the present invention can be actuated by a motor instead of by a manually actuatable member, such as the knob **54**.

In one embodiment, an electric motor is mounted to the worm **52**. A battery may provide electric power to the motor, or it may be powered from another source. A microprocessor can be used to operate the motor to more accurately control positioning of the arm members or to allow for automation of some steps of treatment such as moving from one position to another. The motor may also operate within a control system that allows for remote operation of the device by a healthcare professional or technician. The microprocessor and motor together can be used to cycle the first and second arm members **12** and **14** through extension and flexion (or rotational positions); to move the first and second arm members **12** and **14** in one pivotal direction a certain amount, hold there while tissue stretches, then move further in that direction; or in any other manner. In another manner of use, the orthosis can be set to cycle to one end of the joint's range of motion and hold there for a predetermined period of time, then cycle to the other end of the joint's range of motion and hold there. Given the benefit of this disclosure, skilled artisans would understand how to program and control the microprocessor so that the first and second arm members **12** and **14** move as desired. This embodiment is ideally suited for continuous passive motion exercise, because it can be programmed with the desired sequence of movements. Preferably, at least this embodiment of the invention also would be a portable device so that it may be provided to a patient to use in the home, at work, or wherever they may desire.

It should be understood that the particular physical arrangement of the motor, the battery, and the microprocessor is not the only possible arrangement of those elements. The invention contemplates that other arrangements of these or similarly functional elements are quite suitable, and thus, the invention is intended to cover any such arrangement. Additionally, another type of actuation, other than an electric motor, can also be used. For example, the use of a hydraulic or pneumatic motor as the drive mechanism is contemplated.

The present invention can further include a monitor for use with the device **10**, which provides assurances the patient is properly using the device **16** during his/her exercise period For instance, the monitor can have a position sensor, a temperature sensor, a clock or timer, or a device type sensor for monitoring the patient's implementation of a protocol. The information obtained from these monitoring devices may be stored for later analysis or confirmation of proper use or may be transmitted in real-time during use of the device. The data obtained from the monitor can be analyzed by a healthcare professional or technician and the protocol can be adjusted accordingly. This analysis may be conducted remotely, thereby saving the time and expense of a home visit by a healthcare professional or technician. An exemplary monitoring system is provided in U.S. Publication No. 20040215111 entitled "Patient Monitoring Apparatus and Method for Orthosis and Other Devices," to Bonutti et al., the content of which is herein expressly incorporated by reference in its entirety

Referring to FIG. **8**, another orthosis **60** of the present invention is provided. The orthosis **60** includes a second cuff **62** for attachment to a second body portion **64** such as the forearm, and a first cuff **66** for attachment to a first body portion **68** such as the upper arm. The second body portion **64** is joined to the first body portion **68** at the elbow joint designated A, around which is located, as is well known, soft tissue. Each of the first and second cuffs **66** and **62** includes a plurality of loop connectors **70** for receiving straps extending around the body portions **68** and **64** to clamp the cuffs **66** and **62** to the body portions **64** and **68**. The second cuff **62** is mounted onto a second cuff arm **72**, wherein a force application assembly **18** is interposed between the second cuff **62** and the second cuff arm **72**, such that the force application assembly **18** can provide a constant force to the second body portion **64**.

The second cuff arm **72** is pivotally mounted by a pin **74** to a drive assembly **76**. The second cuff arm **72** includes a support **78**. A first lever arm **80** extends from the drive assembly **76** and is pivotally connected to the support **78** by a pin **82**. The first lever arm **80** is pivotally connected to a cuff actuator block **84**. The cuff actuator block **34** is fixed to the second cuff **62**.

The first cuff **66** is mounted on a first cuff arm **90**. The first cuff arm **90** is pivotally mounted by a pin **92** to the drive assembly **76**. The first cuff arm **90** includes a support **94**. A second lever arm **96** extends from the drive assembly **76** and is pivotally connected to the support **94** by a pin **98**. The second lever arm **96** is pivotally connected to a cuff actuator block **100**. The cuff actuator block **100** is fixed to the second cuff **16**.

The drive assembly **76** includes a drive mechanism having a manually actuatable knob **102** operably connected to a threaded shaft (worm) **104**. The shaft **104** extends through the drive assembly **76**. A threaded actuator block **106** is threaded on the shaft **104**, wherein the first and second lever arms **80** and **96** are pivotally connected to the actuator block **106**.

The knob **102** is turned so that the arm actuator block **106** moves, either upward or downward. As the actuator block **106** moves it applies a directed force to the first lever arm **80**. This force is transmitted to the support **78** and to the second cuff arm **72**. The second cuff arm **72** pivots about the pin **74**.

Operation with respect to the first cuff arm **90** is similar. As the actuator block **106** moves it applies a directed force on the second lever arm **96**. This force is transmitted to the first cuff arm **90**. The first cuff arm **90** pivots about the pin **92** relative to the drive assembly **76**.

Referring to FIG. **9**, an orthosis **120** of the present invention includes a first arm member **122** attachable to the first body portion and a second arm member **124** attachable to the second body portion, wherein the joint axis **126** is interposed between and offset from the first and second arm members **122** and **124**. The first and second arm members **122** and **124** are connected with each other offset from the joint axis **126**.

The first arm member **122** of the orthosis **120** includes a first extension member **128**, which extends at angle .alpha. from the first arm member **122**. The second arm member **124** of the orthosis **120** includes a second extension member **130**, having an arcuate shape. The first and second extension members **128** and **130** are operatively connected a point "P," such that in operation the second extension member **130** travels along an arcuate path about and substantially through point "P." The arcuate shape of the second extension member **130** results in the second body portion rotating about axis **126**, which preferably corresponds to the joint axis, when the second arm member **124** is moved from a first position to a second position relative to the first arm member **122**. The angle .beta. between the longitudinal axis of the first arm member **122** and the longitudinal axis of the second arm member **124** is a function of the joint to be treated and the degree of flexion or extension contractures.

A first cuff **132** is attached to the first arm member **122**, wherein the first cuff **132** is positionable about the first body portion. The first cuff **132** is attached to the first body portion by cuff straps. The first cuff **132** secures the first body portion

to the first arm member **122**. A second cuff **134** is attached to the second arm member **124**, wherein a force application assembly **18** is interposed between the second arm member **124** and the second cuff **134**. The second cuff **134** is positionable about the second body portion and is attached to the second body portion by cuff straps, such that the force application assembly **18** can provide a constant force to the second body portion.

Referring to FIG. **10**, the drive assembly **140** of the orthosis **120** includes a gear system. The drive assembly **140** is supported in the first extension member **128** including a gear **142** rotatable about point "P." A shaft **144**, attached to the gear **142**, extends from first extension member **128**. A knob **146** is connected to the shaft **144**, opposite the gear **142**, for manually rotating the gear **142**. The second extension member **130** includes a series of teeth **148** along an inner surface **150**. The second extension member **130** is threaded through the first extension member **128**, such that the teeth **148** on the second extension member **130** engage the gear **142**. The rotation of the knob **146** causes the gear **142** to rotate, pushing or pulling the second extension member **130** through the first extension member **128**. The drive assembly **140** includes a locking or breaking mechanism which prevents the gear **142** from rotating absent an applied force rotation of the knob **146**. Such a lock or breaking mechanism can include a compression washer or other known gear locking or breaking mechanisms.

The drive assembly **140** is described as utilizing a gear system. However, it is contemplated that other known drive systems can be used to move the second extension member **130** through the first extension member **128**, for example a friction type drive system. Regardless of the drive system used, the joint orthosis of the present invention can act as a brace, restricting the relative movement of the first and second body portions to one degree of freedom (e.g. flexion and extension about the joint). Thus, drive assembly **140** can be configured to allow free motion in one degree of freedom. This can be achieved in a number of different ways. For example, gear **142** can be positioned such that it does not engage teeth **148**.

In an alternative embodiment, the drive assembly **140** for an orthosis **120** in accordance with the present invention can be actuated by a motor instead of by a manually actuatable member, such as the knob **146**, as previously described.

Referring to FIGS. **11** and **12**, an orthosis **160** of the present invention includes a first pair of arm members **162** and **164** attachable to the first body portion and a second pair of arm members **166** and **168** attachable to the second body portion, wherein the joint axis **170** is interposed between the first and second arm member pairs **162**, **164**, **166**, and **168**. The first and second arm member pairs **162**, **164**, **166**, and **168** are pivotally connected with each other on the joint axis **170**.

The first pair of arm members **162** and **164** include attachment brackets **172** and **174** attach there to. A first cuff **178** is attached to the attachment brackets **172** and **174**, wherein the first cuff **178** is positionable about the first body portion. The first cuff **178** is attached to the first body portion by cuff straps. The first cuff **178** secures the first body portion to the first pair of arm members **162** and **164**.

The second pair of arm members **166** and **169** include attachment brackets **180** and **182** attach there to. A second cuff **184** is attached to the attachment brackets **180** and **182**, wherein a force application assembly **18** is interposed between the attachment brackets **180** and **182** and the second cuff **184**. The second cuff **184** is positionable about the second body portion and is attached to the second body portion by cuff straps, such that the force application assembly **18** can provide a constant force to the second body portion.

A drive assembly **188** is connected to and interposed between the first arm member **164** and the second arm member **168**. As shown in FIG. **13**, the drive assembly **188** includes a housing **190** connected to first arm member **164**. The housing **190** includes a worm **192** mounted therein and operably connected to a knob **194**. A rotation of the knob **194** rotates the worm **192**. A main gear **196** is rotatably mounted to the housing **190**, where the main gear **196** rotates about the joint axis **170**. The main gear **196** is mounted in engagement with the worm **194**, such that as the worm **194** is rotated the main gear **196** is rotated. Second arm member **168** is affixed to the main gear **196**, such that as the main gear **196** is rotated the second arm member **168** is rotated about the joint axis with respect to the first arm member **164**,

In an alternative embodiment, the drive assembly **188** for an orthosis **160** in accordance with the present invention can be actuated by a motor instead of by a manually actuatable member, such as the knob **194**.

Additionally, when a joint is flexed or extended a compressive force may be applied to the connective tissue surrounding the joint. It may be desirable to control the compressive force, distracting the joint as the joint is flexed or extended. "Distraction" is defined by one dictionary as "Separation of the surfaces of a joint by extension without injury or dislocation of the parts." (Taber's Cyclopedic Medical Dictionary, 16th Edition, 1989, page 521), and involves stretching rather than compressing the joint capsule, soft tissue, ligaments, and tendons.

Referring again to FIG. **6**, the orthosis **30** includes two relatively pivotable arm members **12** and **14**. Each arm member **12** and **14** includes a cuff **31** and **32** mounted there to, where the first cuff **31** is slidably mounted to the first arm member **12** and the second cuff **32** is slidably mounted to the force application assembly **18**. The cuffs **31** and **32** clamp onto the body portions on either side of the joint. The pivot axis "P" of the arm member **12** and **14** is spaced from the axis of rotation of the joint. Movement of the arm member **12** and **14** to extend the joint may result in distractive forces being applied to the joint. These distractive forces are limited and controlled by having the cuffs **31** and **32** slidable on the arm members **12** and **14**. The cuffs **31** and **32** are selectively moved along the arm member **12** and **14**, during relative movement of the arm member **12** and **14**, to provide the proper amount of distractive forces to the joint and to limit compressive forces on the joint.

Referring to FIG. **14**, the orthosis **190** includes a first arm member **12** attachable to a first body portion and a second arm member **14** attachable to a second body portion. The orthosis **190** further includes a first force application assembly **18*a*** connected to the first arm member **12**. The first force application assembly **18*a*** may be positioned between the first arm member **12** and the first body portion, such that the first force application assembly **18*a*** provides a substantially constant force to the first body portion

A second force application assembly **18*b*** connected to the second arm member **14**. The second force application assembly **18*b*** may be positioned between the second arm member **14** and the second body portion, such that the second force application assembly **18*b*** provides a substantially constant force to the second body portion.

Referring to FIG. **16**, another orthosis **220** of the present invention is provided. The orthosis **220** includes first and second arm member **222** and **224** pivotally connected to a base member **226**. A control assembly **228** is mounted to the base member **226** proximal to the first and second arm members **222** and **224**. The first arm member **222** is operably connected to the control assembly **228** with a first lever arm

230 and the second arm member 224 is operable connected to the control assembly 228 with a second lever arm 232, such that an operation of the control assembly pivots the first and second lever arms 222 and 224 about the base member 226.

The control assembly 228 includes a drive assembly 234 and an integrated force application assembly 236. The drive assembly 234 includes a thread member 238 rotatably mounted in a control frame 240, where a first end of the threaded member 238 in rotatably connected to the base member 226 and a second end of the threaded member 238 is connected to a knob 242, such that a rotation of the knob 242 rotates the threaded member 238. A threaded bushing 244 is slidably mounted in the control frame 240 about the threaded member 238, such that rotation of the threaded member 238 causes the threaded bushing 244 to traverse the threaded member 238.

Referring to FIG. 17, the force application assembly 236 is integrated to the drive assembly 234 and includes a slip bushing 246 slidably mounted in the control frame 240 about the threaded member 238. The slip bushing 246 is movably connected to the threaded bushing 244 with elongated connectors 248, where a first end of the elongated connectors 238 are affixed to the threaded busing 244. A second end of the elongated connectors 248 includes slotted portions 250 configured to receive pin members 252 affixed to the slip bushing 246, such that the slip bushing 246 can move with respect to the threaded bushing 244 along the slotted portions 250. The first and second lever arms 230 and 232 are pivotally connected to the slip bushing 246. A force element 254, such as a spring, is interposed between the threaded bushing 244 and the slip bushing 246.

The knob 242 may be turned to rotate the threaded member 226 such that the threaded bushing 244 and the slip bushing 246 move, either upward or downward along the threaded member 226. As the threaded bushing 244 and the slip bushing 246 move, the slip bushing 224 applies a directed force to the first and second lever arms 230 and 232. This force is transmitted to the first and second arm members 222 and 224, pivoting the first and second arm members 222 and 224 with respect to the base member 226.

In an exemplary use, the orthosis 220 is operated to extend a joint in the following manner. The first arm member 22 is fastened to the first body portion and the second arm member 224 is fastened to the second body portion. The orthosis 220 is attached to the first and second body portions in a first position. The drive assembly 234 is operated to move the second arm member 224 from the first position to a second position, relative to the first arm member 222. The connective tissue of the joint is consequently stretched. The orthosis 220 is maintained in the second position for a predetermined treatment time, utilizing the principles of stress relaxation to stretch the connective tissue of the joint.

As explained above, previous orthoses may allow the tissue to relax as the tissue stretches because the devices simply held the body members in a fixed position. In contrast, the present invention further utilizes a force application assembly 236 to apply loading or forces to the second body portion. This application of force prevents a relaxation of the connective tissue of the joint, utilizing the principles of creep to further stretch the connective tissue of the joint.

Initially, the force applied by the force application assembly 236 may be less than a force applied by the drive assembly 234, such that the force element 254 is compressed between the threaded bushing 244 and the slip bushing 246. As the tissue is stretched, however, the tissue relaxes and reduces the degree of resistance imparted to the drive assembly 234. The drive assembly force may decrease to a point where the force application assembly force exceeds the drive assembly force, such that the force element 254 expanded, moving the slip bushing 236 with respect the threaded bushing 244, providing a force to the tissue. In one embodiment, the force application assembly 238 can impart a substantially constant force onto the second body portion. The application of the force application assembly force utilizes the principals of creep to continuous stretch the joint tissue during the set time period, maintain, decreasing, or preventing a relaxation of the tissue.

After a set time period, the drive assembly 234 may be used to move the second arm member 224 with respect to the first arm member 222 from the second position to a third position, incrementally stretching the tissue surrounding the joint. It is contemplated that the drive assembly 234 may be used to incrementally move the second body portion after the expiration of a predetermined time or until completion of the protocol.

Referring to FIG. 18, the orthosis 220 can further include a second force application assembly 260. The force application assembly 260 can take the form as those previously described herein. For example, the force application assembly 260 includes an assembly member 262 pivotally connected to the first arm member 222, such that the assembly member 262 is interposed between the first arm member 222 and the first body portion. One or more force elements 264, such as a spring, is interposed between the first arm member 222 and the assembly member 262, where the force element 264 provides a force urging the assembly member 262 away from the first arm member 222.

Initially, the force applied by the force application assemblies 236 and 260 may be less than a force applied by the drive assembly 234. As the tissue is stretched, the tissue relaxes lowering the force in the tissue imparted by the drive assembly 234. The drive assembly force may decrease to a point where the force application assembly force exceeds the drive assembly force, such that the force application assemblies 236 and 260 can provide a force to the tissue. In one embodiment, the force application assemblies 236 and 260 can impart a substantially constant force onto the second body portion. The application of the force application assembly forces utilizes the principals of creep to continuous stretch the joint tissue during the set time period, maintain, decreasing, or preventing a relaxation of the tissue.

After a set time period, the drive assembly 16 may be used to move the second arm member 14 with respect to the first arm member 12 from the second position to a third position, incrementally stretching the tissue surrounding the joint. It is contemplated that the drive assembly 12 may be used to incrementally move the second body portion after the expiration of a predetermined time or until completion of the protocol.

As previously discussed, when a joint is flexed or extended a compressive or distractive force may be applied to the connective tissue surrounding the joint. The compressive or distractive force may be controlled by slidably mounting the cuffs to the arm members. Alternatively, the arm members can be expandable to adsorb the compressive and distractive forces imparted in the joint.

Referring to FIG. 19, arm member 12 or 14 may include a telescoping rod 278 having a first portion 280 slidably mounted onto a second portion 282. Each arm member 12 or 14 can include a cuff 31 or 32 mounted to the first portion 280, where the cuff 31 or 32 clamps onto a body portion on either side of the joint. Movement of the arm member 12 or 14 to extend the joint may result in distractive forces being applied to the joint. These distractive forces are limited and controlled by the first member 280 sliding on the second member 282.

The first member **280** is selectively moved along the second member **282**, during relative movement of the arm member **12** or **14**, to provide the proper amount of distractive forces to the joint and to limit compressive forces on the joint.

In addition to controlling the compressive and distractive forces, the telescoping rod **278** can be used to adjust the length of the arm member **12** or **14**. Adjustment of the arm member **12** or **14** enables the orthosis to be better tailored to a user's anatomy.

Additionally, a spring **284** can be interposed between the first and second portions **280** and **282**. The spring **284** can provide a distractive force to the joint. The amount of force applied by the spring can be controlled using a control mechanism. The control mechanism can include a threaded member **286** which can be used to increase or decrease the applied force.

Furthermore, as the spring **284** provides a distractive force, expanding the telescoping rod **278** imparts a moment force about the joint axis. The moment imparts a substantially constant force to the first and second arm members **12** and **14** and the second body portion, utilizing the principles of creep to further stretch the joint tissue.

It should be understood that the orthosis of the present invention can be used to extend, flex, or rotate other joints in the body, such as an ankle, knee, finger, wrist, or elbow joint, with the construction of the orthosis in such case being varied to fit the particular application. The orthosis can be used, for example, to flex the ankle joint to stretch a tight achilles tendon in cerebral palsy or post traumatic contractures. It may also be especially useful in obtaining the last degrees of joint extension. The orthosis can be custom made to fit a particular individual, or can be an off the shelf item. The orthosis can also be used, for example, to eliminate contractures or stress soft tissue. It can be used for patients with cerebral palsy, stroke, spastic paralysis, burns, as well as in post-traumatic or post-surgical cases. It can also be used, for example, in therapy after a knee replacement, in which the extremes of motion in extension or flexion are difficult to obtain without extensive intervention of a therapist. As previously discussed, the invention also may be used to extend the rotational capability of a joint.

Additionally, as noted above, the device can be used for tissue transport, bone lengthening, stretching skin or tissue fascia, etc. For example, device of the present invention can be incorporated in an external bone fixation device, such as a Ilizarov device, where the device is affixed to the bones on the body portions using pins. The drive assembly and force application assembly can be used for bone lengthening and stretch the surround soft tissue.

Furthermore, the present invention is disclosed as utilizing the principles of stress relaxation and creep. However, it is contemplated that the present invention can include additional treatment protocols. For example, in continuous passive motion ("CPM"), the device continually moves the joint through a range of motion. The motion may be provided by an electric or hydraulic motor or a pneumatic system attached to the device. As the CPM moves the joint through its range of motion, however, it does not increase the range of motion.

The present invention can be incorporated into a CPM device, where the CPM device would stop at an end range position. As previously discussed, a drive assembly may be provided to move the joint from its normal position at the end range position of the CPM to a second position, thereby stretching the tissue using the principles of stress relaxation. As the tissue relaxes, a force application assembly may be utilized to provide an additional force, utilizing the principles of creep to stretch the tissue. After a set time period, the drive assembly may be moved to a third position to further stretch the tissue or the CPM device may resume movement of the joint throughout the range of motion. Before CPM movement resumes, the drive assembly may be returned to an original position so that the range of motion of the CPM is returned to its original state, or the drive assembly may be used to alter the range of motion that the CPM follows. In this manner CPM device can be utilized to increase the range of motion of the joint.

In a further embodiment, the device of the present invention can include multiple drive assemblies for providing a macro and micro adjustment of the device. Referring to FIG. **20** another orthosis **300** of the present invention is provided. The orthosis **300** includes first and second arm members **302** and **304** pivotally connected to a base member **306**. A first drive assembly **308** is mounted to the base member **306** proximal to the first and second arm members **302** and **304**. The first arm member **302** is operably connected to the first drive assembly **308** with a first lever arm **310** and the second arm member **304** is operably connected to the first drive assembly **308** with a second lever arm **312**, such that an operation of the first drive assembly **308** pivots the first and second lever arms **302** and **304** about the base member **306**.

As describe above in FIG. **16**, The first drive assembly **308** can include a thread member **238** rotatably mounted in a control frame **240**, where a first end of the threaded member **238** in rotatable connected to the base member **306** and a second end of the threaded member **238** is connect to a knob **242**, such that a rotation of the knob **242** rotates the threaded member **238**. A threaded bushing **244** is slidably mounted in the control frame **240** about the threaded member **238**, such that rotation of the threaded member **238** caused the threaded bushing **244** to traverse the threaded member **238**. The first drive assembly **308** provides a macro or gross adjustment of the first and second arm members **302** and **304**. In use, this drive member may implement principles of stress relaxation by moving the joint or tissue from a first position to a second position that is maintained while the tissue stretches.

A second drive assembly **314** is mounted to the second arm member **304**. The second drive assembly **314** includes an assembly member **316** pivotally connected to the second arm member **304**. A drive element **318** in interposed between the assembly member **316** and the second arm member **304**. The drive element **318** provides a force to the assembly member **316** and the second arm member **304**, such that the position of the assembly member **316** can be moved and selectively positioned with respect to the second arm member **304**. The drive element **318** provides a micro or fine adjust to the device and may be used to utilize the principles of creep by imparting forces to the joint while the first drive assembly **308** is held in a fixed position.

Thus, once the first drive assembly moves the joint or tissue to a second position, the second drive assembly may impart loading on the tissue or joint. This loading can be provided by monitoring resistive forces of the tissue and adjusting the device to maintain a desired loading condition. Thus, over time the position of the second drive assembly may change while the position of the first drive assembly remains fixed. If the first drive assembly is subsequently moved to a third position, the second drive assembly may also be repositioned to an original or starting position with respect to the second arm member **304**.

The drive element **318** can include a threaded member **320** threaded through the second arm member **304**. A first end of the threaded member **320** contact a bottom surface of the assembly member **316**. A second end of the threaded member **320** includes a knob **322**, a rotation of which threaded the

threaded member **320** through the second arm member **304** changes the position of the assembly member **316** with respect to the second arm member **304**.

Alternatively, the drive element **318** can be a gear system or pneumatic device positioned between the assembly member **316** and the second arm member **304**. The gear system or pneumatic device can provide a force to change the position of the assembly member **316** with respect to the second arm member **304**.

In the previous embodiment the first and second arm members are shown being connected by a simple connector, pivoting about a singly axis. However, it is contemplated the s first and second arm member can be connect by a complex connector, allowing rotation about multiple axis. For example, the complex connect can be a ball and socket type joint, a universal joint, or other similar type joints.

Referring to FIG. **21**, neck brace **400** can be used to move or stabilize a neck of a patient. The neck brace **400** includes a T-shaped support member **402** which is connected with a torso **404** of a person. A chin support **406** is connected with a chin of the person. An actuator mechanism **408** moves the chin support **406** relative to the support member **402**. The chin support **406** is moved relative to the support member **402** after the chin support is connected to the chin and the support member is connected to the torso **404** to move the neck of the person. The support member **402** and the chin support **406** may have any desired construction as long as they are effective to engage the torso **404** and the chin.

A pair of interconnecting members or arms **410** connects the chin support **406** with the support member **402**. The arms **410** extend from the chin support **406** to the actuator mechanism **408**. Each of the arms **410** has an upper end **412** with a slot **414**. Threaded members **416** extend from the portion **418** of the chin support **406** through the slots **414**. Clamping members **420** threadably engage the threaded members **416** to clamp the ends **412** of the arms **410** to the portion **418**. The portion **418** can be positioned relative to the arms **410** when the clamping members **420** are loosened from the threaded members **416**. The portion **418** can be pivoted about the threaded members **416** and the threaded members can be moved between the ends of the slots **414** to position the chin support **406** relative to the arms **410**.

The actuator mechanism **408** is connected to a pivot support **422** connected to a support plate **424** of the support member **402**. The actuator mechanism **408** is connected to the pivot support by a pivot connection **426**. The actuator mechanism **408** transmits force between the support member **402** and the chin support **406** to simultaneously pivot the actuator mechanism about a pivot axis of the pivot connection **426** and move the interconnecting members **410** relative to the actuator mechanism.

The actuator mechanism **408** transmits force from an input member which, in the illustrated embodiment of the neck brace **400**, is a manually rotatable knob **428**. Force is transmitted from the knob **428** through the actuator mechanism **408** to the chin support **406**. Force is transmitted from the actuator mechanism **408** to pivot the actuator mechanism about the pivot connection **426**. In addition, force is transmitted from the knob **428** to move the interconnecting members **410** and the chin support **406** relative to the actuator mechanism **408** as the actuator mechanism pivots about the pivot connection **426**. The neck brace **400** is more fully described in U.S. Pat. No. 6,503,213, entitled Method of Using a Neck Brace, to Bonutti, the entire contents of which are herein incorporated by reference in its entirety.

The interconnecting arms **410** further include a force application assembly **430**. The arms **410** are bisected into first and second portions **432** and **434**, where the force application assembly **430** is interposed between the first and second portions **432** and **434**. The force application assembly **430** can provided a force to the second portion **434** with respect to the first portion **432**, such that a distractive force can be applied to the neck of the patient. For example, the distractive force provides a cervical traction to the neck of the patient, separating the vertebrae.

As previously discussed, the force application assembly can include a spring portion, bladder or other such mechanism. Additionally, the applied force can be selectively controlled, where the magnitude of the applied force can be increased or decreased by the patient, medical practitioner, or others.

The components of the present invention are rigid members made of, for example, aluminum, stainless steel, polymeric, or composite materials. The member and extensions are rigid so as to be able to transmit the necessary forces. It should be understood that any material of sufficient rigidity can be used.

For example, the components can be made by injection molding. Generally for injection molding, tool and die metal molds of the components are prepared. Hot, melted plastic material is injected into the molds. The plastic is allowed to cool, forming components. The components are removed from the molds and assembled.

Furthermore, it is contemplated that the components can be made of polymeric or composite materials such that the device can be disposable. For example, at least some or all of the components can be made of a biodegradable material such as a biodegradable polymer. Among the important properties of these polymers are their tendency to depolymerize relatively easily and their ability to form environmentally benign byproducts when degraded or depolymerized. One such biodegradable material is poly (hydroxyacids) ("PHA's") such as polyactic acid ("PLA") and polyglycolic acid ("PGA").

Additionally, the device can be made of a nonmagnetic material. In such instance, the device can be used as a positioning device for use in imaging devices, such as a MRI device. It is also contemplated that the device can be used as a positioning device for use during surgical procedures, where it may be necessary to adjust and hold the position of the joint.

All references cited herein are expressly incorporated by reference in their entirety.

It will be appreciated by persons skilled in the art that the present invention is not limited to what has been particularly shown and described herein above. In addition, unless mention was made above to the contrary, it should be noted that all of the accompanying drawings are not to scale. A variety of modifications and variations are possible in light of the above teachings without departing from the scope and spirit of the invention, which is limited only by the following claims.

What is claimed is:

1. A device for increasing the range of motion of a tissue in a body of a patient, the device comprising:

a first cuff configured to couple to a first body portion;

a second cuff configured to couple to a second body portion;

a drive assembly operatively connected to the first and second cuffs and operable to drive movement of the second cuff with respect to the first cuff to adjust a position of the second cuff relative to the first cuff;

a first arm member operatively connecting the first cuff to the drive assembly;

a second arm member operatively connecting the second cuff to the drive assembly, the second arm member mov-

able with respect to the first arm member in response to the operation of the drive assembly to adjust a position of the second arm member relative to the first arm member;

a force element operatively connected to the second arm member, the force element comprising a spring configured to apply a spring force to the second arm member to urge movement of the second arm member relative to the first arm member; and

a lockout element having a locking position and configured to selectively inhibit the spring from urging movement of the second arm member relative to the first arm member when in the locking position,

wherein the drive assembly is configured to selectively operate to drive movement of the second arm member with respect to the first arm member independent of the spring when the lockout element is in the locking position.

2. A device for increasing the range of motion of a tissue in a body of a patient set forth in claim **1**, wherein the drive assembly imparts movement of the spring relative to the first cuff in response to operation of the drive assembly in driving movement of the second cuff with respect to the first cuff.

3. A device for increasing the range of motion of a tissue in a body of a patient set forth in claim **1**, wherein the drive assembly comprises a worm and a gear engaging the worm.

4. A device for increasing the range of motion of a tissue in a body of a patient set forth in claim **1**, wherein the drive assembly is operable to drive movement of the second cuff with respect to the first cuff in a first direction, and wherein the spring is configured to selectively apply the spring force to the second cuff to urge movement of the second cuff relative to the first cuff in the first direction.

* * * * *