IN THE UNITED STATES PATENT AND TRADEMARK OFFICE

In re Patent of: King et al.
U.S. Patent No.: 6,423,268 Attorney Docket No.: 19498-0007IP1
Issue Date: July 23, 2002
Appl. Serial No.: 09/760,429
Filing Date: Jan. 16, 2001
Title: BLOOD HEATING SYSTEM WITH MUTUALLY EXCLUSIVE RELAY-CONTROLLED HEAT EXCHANGERS

Mail Stop Patent Board
Patent Trial and Appeal Board
U.S. Patent and Trademark Office
P.O. Box 1450
Alexandria, VA 22313-1450

PETITION FOR *INTER PARTES* REVIEW OF UNITED STATES PATENT NO. 6,423,268 PURSUANT TO 35 U.S.C. §§ 311–319, 37 C.F.R. § 42

TABLE OF CONTENTS

Page

TABLE OF CONTENTS (cont'd)

Page

TABLE OF AUTHORITIES

Page(s)

Cases

Statutes

Other Authorities

TABLE OF AUTHORITIES

Page(s)

EXHIBIT LIST

Exhibit Number	Exhibit
1001	U.S. Patent No. 6,423,268 (patent-in-suit)
1002	Declaration of Arthur Kelley
1003	Declaration of David Fallen
1004	Declaration of Edward Wells
1005	3M Healthcare, Sarns™ TCM II Operators Manual (Dec. 1994)
1006	U.S. Patent No. 3,767,894 ("Berger")
1007	U.S. Patent No. 5,702,358 ("Witherspoon")
1008	U.S. Patent No. 4,010,412 ("Forman")
1009	Selected Excerpts from Prosecution History of U.S. Patent No. 6,423,268
1010	U.S. Patent No. 3,724,536 ("Baxter")
1011	U.S. Patent No. 4,729,424 ("Mizuno")
1012	U.S. Patent No. 5,120,501 ("Mathewson")
1013	U.S. Patent No. 5,385,540 ("Abbott")
1014	U.S. Patent No. 5,403,281 ("O'Neill")
1015	U.S. Patent No. 5,891,330 ("Morris")
1016	U.S. Patent No. 6,180,000 ("Wilbur")
1017	Dr. Kelley CV
1018	U.S. Patent No. 3,005,109 ("Funkhouser")
1019	U.S. Patent No. 4,316,663 ("Fischer")
1020	U.S. Patent No. 3,532,857 ("Zeitlin")
1021	U.S. Patent No. 5,239,164 ("Hirota")
1022	U.S. Patent No. 4,786,799 ("Welle")
1023	David Fallen CV
1024	U.S. Patent No. 5,866,880 ("Seitz '880")
1025	Declaration of Michael Brigham
1026	3M Health Care, A Basic Guide to 3M Health Care's Cardiovascular System's Sarns and CDI Products (Copyright 1996)
1027	U.S. Patent No. 6,246,831 ("Seitz")

EXHIBIT LIST

1028	Joint Claim Construction Statement
1029	Screenshot of ’268 Patent Bibliographic Information
1030	Summary of Claims and Grounds
1031	SCR Manual
1032	U.S. Patent No. 2,698,893
1033	U.S. Patent No. 4,138,607
1034	U.S. Patent No. 4,447,712
1035	U.S. Patent No. 4,786,799
1036	U.S. Patent No. 5,396,047
1037	U.S. Patent No. 4,844,326

I. INTRODUCTION

Terumo Cardiovascular Systems Corporation ("Petitioner" or "Terumo") petitions for *Inter Partes* Review ("IPR") under 35 U.S.C. §§ 311–319 and 37 C.F.R. § 42 of all claims of U.S. Patent No. 6,423,268 ("the '268 patent") (Ex. 1001). There is a reasonable likelihood Petitioner will prevail in its challenge of at least one claim identified as unpatentable in this Petition.

Drawing too much current from a single source of electrical power creates an overload and trips the circuit breaker or blows the fuse associated with the electrical circuit. This is a common everyday problem in many contexts, familiar even to those not of skill in the art. It has long been known that an obvious solution to the problem is to control or allocate the amount of electrical energy being used at any one time. Such systems date back to at least the 1950s and were widespread by January 2001, the priority date of the '268 patent. Declaration of Arthur Kelley (Ex. 1002) ("Kelley Dec.") ¶¶ 18-23.

The '268 patent claims a system that purports to manage the electrical load of two heaters. Managing the electrical load of two or more heaters was well known at the time of the patent because heaters require large amounts of electric current and were used long before the '268 patent. *Id*. Two exemplary prior art references from the 1970s [Forman (Ex. 1008) and Berger (Ex. 1006)], and one from the 1990s [Seitz (Ex. 1027)], teach electrical load management ("ELM")

systems with multiple heaters or other devices that draw electric current. Kelley Dec. ¶¶ 176, 201, 215. Each of the references also use relays. A relay is simply an electrically operated switch that opens and closes circuits either electromechanically or electronically. Id. at ¶¶ 24-25. Relays date back to at least the 1930s and were well known as of the date of the ’268 patent. *Id*. at ¶¶ 64-69.

Why then, if ELM systems were well known by the date of the ’268 patent, did the examiner allow the challenged claims – which broadly recite a generic ELM system? Because ***the Examiner did not consider a single prior art reference*** that taught such a system.[1] Not surprisingly in view of the incomplete record before him, the Examiner allowed the claims based on the mistaken belief that the use of “a relay that switches” in a manner that does not allow two heaters “to run at the same time” was patentable. Ex. 1009, ’268 Patent Prosecution History, Notice of Allowance at 3.

Beyond the claim limitations directed to the ELM system itself, the Background of the Invention section of the ’268 patent admits that the remaining claim limitations of independent claims 1 and 12 were well known and in the prior

[1] The application for the ’268 patent was assigned to Group Art Unit 3762, which includes: chemical apparatus and process disinfecting deodorizing, preserving, or sterilizing; and surgery: light, thermal, and electrical application.

art. These limitations include: (1) the first and second fluid circuits; (2) their associated heaters; and (3) the heat exchange relationship between the fluid circuits and heaters. *See* Ex. 1001 at 1:14-66; 9:2-23; 10:13-24.

Finally, while parts of the ’268 patent discuss the well-known “medical” aspects of an open heart surgery procedure (such as the blood or cardioplegia solution that is heated or cooled and the path the blood takes on its journey outside the body), such details are entirely absent from the claims. Thus, the fact that parts of the ’268 patent include some discussion of the medical aspects of open heart surgery does nothing to salvage the validity of the claims.

Had the Office been aware of the prior art references cited herein, the challenged claims of the ’268 patent never would have issued. Petitioner therefore requests the Board institute *inter partes* review of the challenged claims on the grounds set forth below.

II. MANDATORY NOTICES UNDER 37 C.F.R. § 42.8

A. Real Party-In-Interest Under 37 C.F.R. § 42.8(b)(1)

Terumo Cardiovascular Systems Corporation is the real party-in-interest.

B. Related Matters Under 37 C.F.R. § 42.8(b)(2)

Petitioner is not aware of any reexamination certificate or certificate of correction for the ’268 patent. The Patent Owners, two individuals, Sheilah Dianne King and Allen Paige King (collectively “Patent Owners” or “PO”), filed a

complaint alleging infringement of the ’268 patent in a lawsuit against the Petitioner and served Petitioner with the Complaint on February 4, 2014 (*Allen Paige King and Sheilah Dianne King v. Terumo Cardiovascular Systems Corporation*, S.D. Tex., Case No. 4:13-cv-03281).

C. Lead And Back-Up Counsel Under 37 C.F.R. § 42.8(b)(3)

Petitioner provides the following designation of counsel.

LEAD COUNSEL	BACK-UP COUNSEL
Mathias W. Samuel, Reg. No. 39,823 3200 RBC Plaza, 60 South Sixth Street Minneapolis, MN 55402 Tel: 612-337-6569 / Fax 612-288-9696 samuel@fr.com	Stephen R. Schaefer, Reg. No. 37,927 3200 RBC Plaza, 60 South Sixth Street Minneapolis, MN 55402 Tel: 612-337-6569 / Fax 612-288-9696 schaefer@fr.com

D. Service Information

Please address all correspondence and service to the address of both counsel listed above. Petitioner also consents to electronic service by email at IPR19498-0007IP1@fr.com (referencing No. 19498-0007IP1 and cc’ing samuel@fr.com and schaefer@fr.com).

III. PAYMENT OF FEES – 37 C.F.R. § 42.103

Petitioner authorizes charging Deposit Account 06-1050 for the petition fee set in 37 C.F.R. § 42.15(a) and for any other required fees.

IV. REQUIREMENTS FOR IPR UNDER 37 C.F.R. § 42.104

A. Grounds for Standing Under 37 C.F.R. § 42.104(a)

Petitioner certifies that the ’268 patent is available for IPR and that Petitioner is not barred or estopped from requesting IPR.

B. Challenge Under 37 C.F.R. § 42.104(b) and Relief Requested

Petitioner requests IPR of all claims of the '268 patent on the grounds listed in the table below. In support, this Petition includes evidentiary declarations of Dr. Arthur Kelley (Ex. 1002) ("Kelley Dec."), David Fallen C.C.P. (Ex. 1003) ("Fallen Dec."), Michael Brigham (Ex. 1025) and Edward Wells (Ex. 1004).

Ground	Claims	Basis for Rejection
Ground 1	**All claims**	Obvious under 35 U.S.C. § 103 – 3M HEALTH CARE, A BASIC GUIDE TO 3M HEALTH CARE'S CARDIOVASCULAR SYSTEM'S SARNS AND CDI PRODUCTS (Copyright 1996) ("3M Guide") (Ex. 1026) in view of U.S. Patent No. 4,010,412 to Forman ("Forman") (Ex. 1008)
Ground 2	**1-3, 5-14, 16-18**	Obvious under 35 U.S.C. § 103 – 3M HEALTH CARE, SARNS™ TCM II OPERATORS MANUAL (Dec. 1994) ("TCM II Manual") (Ex. 1005) in view of U.S. Patent No. 3,767,894 to Berger ("Berger") and U.S. Patent No. 6,246,831 to Seitz et al. ("Seitz") (Ex. 1027)
Ground 3	**All Claims**	Obvious under 35 U.S.C. § 103 – U.S. Patent No. 5,702,358 to Witherspoon et al. ("Witherspoon") (Ex. 1007) in view of Forman (Ex. 1008)

The Witherspoon, Berger, and Forman references are prior art under at least 35 U.S.C. § 102(b), having publication dates more than a year before January 16, 2001. The Seitz reference is prior art under at least 35 U.S.C. § 102(e) having a filing date of June 16, 1999. The 3M Guide is prior art under at least 35 U.S.C. § 102(b) because it was publicly available in 1996. *See* Declaration of Michael Brigham (Ex. 1025). The TCM II Manual is prior art under at least 35 U.S.C. § 102(b) because it was publicly available in 1995. *See* Declaration of Edward

Wells (Ex. 1004). None of these references were considered by the Examiner during prosecution of the ’268 patent.

V. SUMMARY OF THE ’268 PATENT

A. Specification

The ’268 patent purports to provide “a fluid heating system which avoids unnecessary power surges, spikes, and current draw.” Ex. 1001 at 2:26-28. To that end, the purported invention comprises a heater in heat exchange relationship with a first fluid circuit, a second heater in heat exchange relationship with a second fluid circuit, and a power supply connected to the first and second heaters. *Id*. at 9:4-14; 10:15-20. To ensure that the two heaters do not draw an excessive amount of current, the patent teaches “deactivating” one of the first and second heaters when the other is activated such that the two heaters cannot be activated simultaneously. *Id*. at 10:21-24. Certain embodiments teach a “controller” electrically interconnected with the power supply and heaters such that the first and second heaters cannot be activated simultaneously and include a “relay means” for deactivating one of the heaters when the other is activated. *Id*. at 9:15-243.

The patent acknowledges it was known that fluids associated with the arterial/venous and cardioplegia fluid lines may be heated and recirculated. *Id*. at 1:8-12; 1:60-66. The “arterial/venous” fluid line may include a heat exchanger for controlling the temperature of the blood contained in the line. *Id*. at 1:8-12; 1:14-

22. A separate fluid line may be used for administering cardioplegia to the patient's heart during surgery. Ex. 1001 at 1:31-32. Traditionally, cardioplegia (e.g., a cold potassium solution or a blood/potassium solution) is used to cool and stop the heart to minimize damage to the heart during surgery. *Id*. at 1:31-45. Fallen Dec. ¶ 20. The patent acknowledges that it was known that the cardioplegia line may also include a heat exchanger for controlling the temperature of and/or heating the cardioplegia solution. Ex. 1001 at 1:50-53.

Figure 5 of the '268 patent is an "electrical schematic" that purports to depict "the heaters of the present invention." *See* Ex. 1001 at 4:3-4; *see also* Kelley Dec. ¶¶ 77-150 (describing Figure 5 in detail). Figure 5 depicts the ELM control system electrically connected to two heaters, depicted as items 212 and 216. Ex. 1001 at 8:5-19. Figure 5 also shows two terminals 210 and 236 referred to as "the AC power supply 210" [8:4] and "the AC power supply 236" [8:16-17] or collectively as "the AC power supplies 210 and 236" [8:57-58]. When heater 212 is activated, AC current flows from AC power supply 210 to heater 212. Similarly, when heater 212 is deactivated, no AC current flows from AC power supply 210 to heater 212. AC power supply 236 and heater 216 are connected in a similar manner.

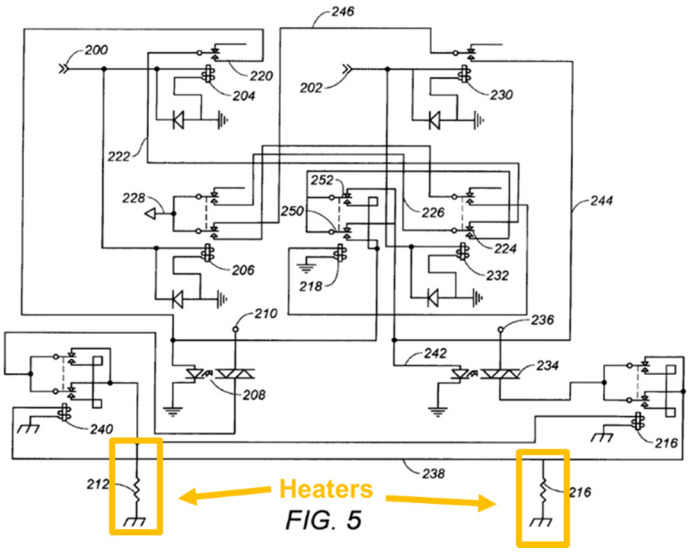

Ex. 1001 at Fig. 5 (annotations added).

Operation of the two heaters 212 and 216 is the object of the circuit shown in Figure 5. Operation purportedly is implemented by two "inputs" shown at 200 and 202 variously described collectively as "heat controller inputs 200 and 202" [7:62] or "the heat controllers 200 and 202" [8:25]. Individually they are described as "heat controller 200" [7:66, 8:14] and "heat controller 202" [7:67, 8:13, 8:14]. Specifically, to activate heater 212, heat controller 200 is used, and to activate heater 216, heat controller 202 is used, and when it is desired to activate both heaters 212 and 216, both heat controllers are used. *Id*. at 7:62-8:41.

Figure 5 depicts various electromechanical and solid-state relays. A "relay" is simply a signal actuated switching device. Kelley Dec. ¶¶ 24-25, 152. More specifically, it is an electrical switch that opens, closes, or moves between positions when receiving a signal so as to permit or interrupt the flow of electrical

current. Kelley Dec. ¶ 24. Electromechanical relays date back to at least the 1950s and were well known in the art at the time of the alleged invention. Kelley Dec. ¶¶ 64-69. Solid state relays date back to at least the 1970s and were well known in the art at the time of the alleged invention. *Id*. Both electromechanical and solid-state relays were frequently used for switching power on or off or between two or more loads. *Id*. Relays also provide additional functional benefits, such as a delay to minimize current spikes and power surges. *Id*. at ¶ 75; *see also* Ex. 1001 at 8:42-52. These functional benefits were also well known long before the priority date of the '268 patent. Kelley Dec. ¶¶ 42-46, 64-69, 75.

Seven electromechanical relays (204, 230, 206, 218, 232, 240 and 216)[2] and two solid-state relays (208 and 234) are depicted in Figure 5. The TRIACs of the solid state relays (208/234) prevent or allow current from the AC power sources (210/236) to flow to the heater (212/216). Specifically, when the LED associated with a solid state relay is powered, the TRIAC allows current to flow. Conversely, when the LED associated with the solid state relay is not powered, the TRIAC does not allow current to flow. *See* Kelley Dec. ¶¶ 98-104.

[2] The relay coil with the label "216" is the same label as heater 216 and is likely meant to be 214. Ex. 1001 at 8:7.

When heat is desired from heater 212, heat control input 200 is powered. Ex. 1001 at 7:66-8:12. When heat control input 200 is powered, the circuit of Figure 5 will route power to solid state relay 208 and current will flow to heater 212. *Id*. at 7:66-8:12. If instead heat control input 202 is powered, the circuit of Figure 5 will route power to solid state relay 234 and will activate heater 216. *Id*. at 8:13-23. If both heat control inputs (200 and 202) are powered, the circuit of Figure 5 will alternately energize and de-energize heaters 212 and 216. *Id*. at 8:24-41.

B. Claims

The claims of the ’268 patent recite basic ELM concepts dating back to at least the 1970s. Claim 1 recites a “controller” and a “relay means” that prevent both heaters from running at the same time. Claim 12 lacks even the controller/relay of claim 1. It simply recites not activating both heaters at the same time.

The graphic below shows the claim elements (shown in italicized red font) in the context of an open heart surgery circuit diagram. *See* Fallen Dec. ¶ 15 (discussing same).

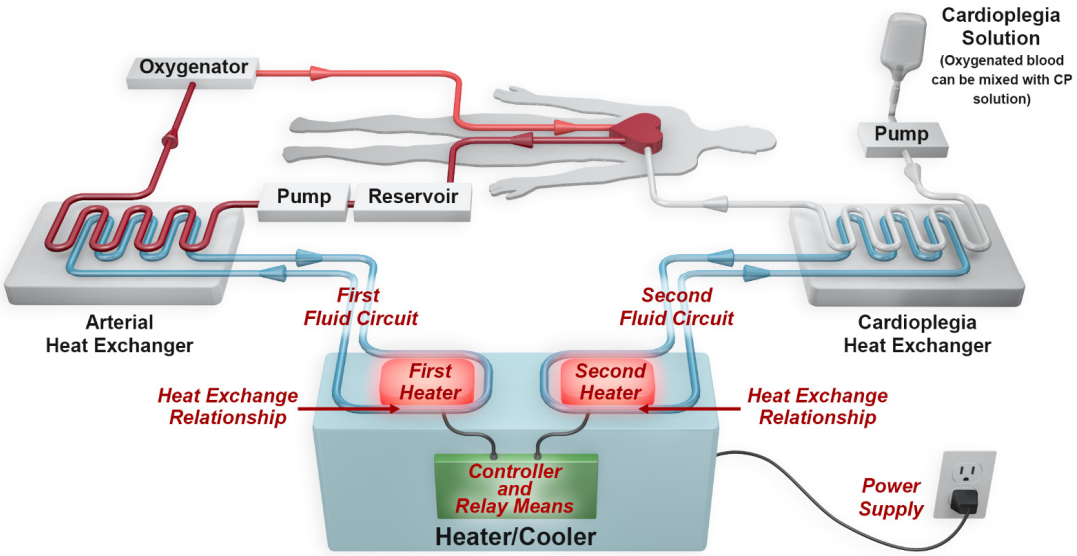

C. Prosecution History

The ’268 patent was filed on January 16, 2001. Ex. 1001. Following a cursory examination, the patent issued on July 23, 2002. *Id*.

The only office action was mailed on December 10, 2001.[3] *See* Ex. 1009 at 12/10/2001 Office Action. The Examiner rejected certain claims as anticipated and others as obvious. He also indicated some claims were allowable because they recited a relay, where the relay did not allow both heaters to run at the same time. *Id*. at 6-7. While the Examiner’s statement regarding relays was correct for issued

[3] During prosecution Applicants admitted that the entirety of Fig. 1, with the exception of element 12, was prior art. *See* Ex. 1009 at 12/3/2001 Office Action at 2; Ex, 1009 at 01/16/2001 Amendment at 10; Ex. 1001 at 4:10-19.

claims 1-11 and 17-18, it was incorrect for issued claims 12-16. For example, then claim 14 (issued claim 12) fails to recite a "relay." Ex. 1001 at 10:12-24. The claims also fail to recite a "controller." *Id*. Nonetheless, the Examiner deemed then claim 14 allowable.

In response to the Office Action, Applicants amended claims as suggested by the Examiner. A Notice of Allowability was issued on March 19, 2002. The Notice included the Examiner's statement of reasons for allowance, which were the same as stated in the Office Action: "The subject matter not found was the method of exchanging heat in fluid in separate circuits that are interposed by a relay that switches between the heat exchangers, not allowing both to run at the same time, in combination with the other elements and steps of the claim." Ex. 1009 at Notice of Allowability at 2.

A total of seven references were cited during prosecution. Ex. 1001. The seven references are included hereto as Exhibits 1010 – 1016. None of the references teach an ELM system.

The '268 patent expired on July 23, 2014 for failure to pay the 12th year maintenance fee. Ex. 1029.

D. Person of Ordinary Skill in the Art

The hypothetical person of ordinary skill in the art of the '268 patent is an individual with a bachelor's degree in electrical engineering or equivalent

coursework or experience or an equivalent degree and at least two years of experience working with and/or designing electrical load management systems, including ELM systems that use relays. Kelly Dec. ¶ 12.

VI. CLAIM CONSTRUCTION UNDER 37 C.F.R. §§ 42.104(B)(3)

Claims in an unexpired patent are to be given their "broadest reasonable construction in light of the specification." 37 C.F.R. § 42.100(b). There appears to be some debate as to how claims in an expired patent should be construed; the BRC standard of 37 C.F.R. § 42.100(b) or the *Phillips v. AWH Corp.*, 415 F.3d 1303, 1312 (Fed. Cir. 2005) (en banc) standard. *See Amkor Tech., Inc. v. Tessera, Inc.*, IPR2013-00242, Paper 129 (May 22, 2014). The constructions offered below are in accordance with the *Phillips* standard. Should the Board choose to apply the BRC standard, that standard is at least as broad as the *Phillips* standard.

A. Agreed Constructions (from district court litigation)

Below is a table that summarizes the parties' agreed-upon constructions for claim terms or phrases in the district court litigation. *See* Ex. 1028. Petitioner applies these agreed constructions in this Petition.

Term	Parties' Agreed Upon Constructions
"power supply"	a source of power
"controller"	a device, mechanism, or software that controls another component or system

"relay means"[4]	one or more signal-actuated switching devices

B. "fluid circuit"

Petitioner: "a fluid pathway for circulating fluid"	PO: "a fluid pathway for circulating fluid ***in a blood heating system***"

The parties largely agree over the construction of this term. The disagreement is over one aspect of the construction. PO seeks to add the phrase "in a blood heating system." The term "fluid circuit" appears in both independent claims 1 and 12. Both claims recite "a first" and "a second" fluid circuit. Claim 1 further recites that the second fluid circuit "defines a fluid flow pathway" that is "independent of said first fluid circuit." Thus, the claim language itself makes clear that the claimed "fluid circuit" must "define a fluid flow pathway." The actual language used in a claim provides "substantial guidance" as to the meaning of a particular claim term. *Phillips*, 415 F.3d at 1314. The claim does not recite that the claimed "fluid circuit" is limited to use "in a blood heating system." Nowhere, in either claim 1 or 12 is the term so limited.

PO's proposed construction must also be rejected because it would exclude the preferred embodiment. According to the specification, one of the two fluid

[4] Figure 5 of the '268 patent, discussed at pp. 7-10, teaches one possible electrical schematic that uses relays.

circuits heats cardioplegia solution. Ex. 1001 at 1:32-59; 4:60-65. "Cardioplegia" may be a potassium solution. Ex. 1001 at 1:34; Fallen Dec. ¶ 20 "Cardioplegia solution" is a broader term that is understood to include pure cardioplegia or a mixture of cardioplegia and blood. Fallen Dec. ¶ 20. PO's proposed construction, which would improperly limit both of the claimed fluid circuits to a system for heating ***blood***, excludes heating cardioplegia solution, because cardioplegia solution is not blood. A construction that excludes the preferred embodiment is rarely, if ever, correct. *Vitronics Corp. v. Conceptronic, Inc.*, 90 F.3d 1576, 1583 (Fed. Cir. 1996).

Because PO's proposed construction is clearly improper, Petitioner cannot agree to the construction and it should not be adopted. However, it is worth noting that ***even if the Board were to adopt PO's construction*** the proposed grounds of invalidity still render the claims invalid. The prior art teaches both of the claimed "fluid circuits" even if the term is (improperly) limited to "a fluid pathway for circulating fluid ***in a blood heating system***."

C. "cannot be activated simultaneously"

To the extent that the Board determines "cannot be activated simultaneously" requires construction, the term was defined repeatedly during prosecution. In the only Office Action and the Notice of Allowability, the Examiner defined the term to mean "not allowing both [heaters] to run at the same

time. *See* Ex. 1009 at 2/3/2001 Office Action; Notice of Allowability at 2 ("The subject matter not found was the method of exchanging heat in fluid in separate circuits that are interposed by a relay that switches between the heat exchangers, ***not allowing both to run at the same time***, in combination with the other elements and steps of the claims."). PO acquiesced and accepted this construction. As such, the prosecution history informs the meaning of "cannot be activated simultaneously" because it demonstrates how the inventor understood the invention. *Phillips*, 415 F.3d at 1317.

VII. THERE IS A REASONABLE LIKELIHOOD THAT AT LEAST ONE CLAIM OF THE '268 PATENT IS UNPATENTABLE

By January 16, 2001, the priority date of the '268 patent, the following was well known in the open heart surgery art:

- The use of two independent fluid circuits (usually containing water), each fluid circuit having a heater in a heat exchange relationship with the fluid circuit (Ex. 1001 at 1:60-2:14; 3M Guide at 2-3, 11; TCM Manual at 5, 25-26 (teaching two independent fluid circuits and a heater in heat exchange relationship with one fluid circuit); Witherspoon at 2:55-64 (teaching a single heated circuit); Fallen Dec. ¶¶ 25, 27);
- Using the heater to heat the water in the fluid circuit (Ex. 1001 at 1:60-2:14; 3M Guide 2-3, 11; TCM Manual at 5, 25-26; Witherspoon at 2:55-64; Fallen Dec. ¶ 25);

- Using the heated water in one of the fluid circuits to heat the blood being returned to the patient (after the blood is oxygenated) via the arterial supply line (Ex. 1001 at 1:14-30; 3M Guide at 2-3, 11; TCM Manual at 5, 25-26; Witherspoon at 4:40-44; Fallen Dec. ¶¶ 25, 27); and
- Using the heated water contained in the other of the fluid circuits to heat the cardioplegia solution being provided to the heart via the cardioplegia supply line (Ex. 1001 at 1:31-59; 3M Guide at 2-3, 11; Witherspoon at 2:55-64; Fallen Dec. ¶¶ 25, 27).

The above citations to the prior-art admissions in the Background of the ’268 patent (the “admitted prior art” or “APA”) alone prove that most of the claim limitations at issue were well known in the art.

In view of the foregoing, the obviousness question is straightforward. Are the claims of the ’268 patent, which recite a well-known ELM concept (shutting one heater off when the other heater is on) patentable? The answer is clearly no. Such systems were well known at the time of the alleged invention of the ’268 patent and would have been obvious to a person of ordinary skill in the art.

A. Ground 1 – 3M Guide in view of Forman (All Claims)

All claims of the ’268 patent are rendered obvious by the combination of the 3M Guide and Forman. While the admitted prior art alone in combination with Forman renders many (if not all) of those same claims obvious, Petitioner uses the

3M Guide publication as explicitly disclosing the admitted prior art. *See PharmaStem Therapeutics, Inc. v. ViaCell, Inc.*, 491 F.3d 1342, 1362 (Fed. Cir. 2007).

Claims 1, 7, 12, and 13 are asserted in the underlying litigation. As such, those claims are addressed first. Thereafter, the remaining dependent claims are organized into logical groups and addressed. The first group of dependent claims are those which relate to a particular type, amount or value (claims 2, 6, 8, 11, and 14-17). For example, claim 11 specifies that the first and second heaters of claim one are 1500 watt electrical heaters. *See* Ex. 1001. Similarly, claim 15 specifies that the heaters are alternatively energized and de-energized every 4 seconds. *Id*. The second group of dependent claims are those that recite a "timer" or "timer means" for controlling the energizing and de-energizing of the first and second heater (claims 3-5). The third group of dependent claims are those that recite a "sensor" for sensing a state or value such as a water temperature (claims 9-10, 18). For the Board's convenience, Exhibit 1030 organizes the various claims of the '268 patent and their "groups" in a table.

1. 3M Guide

The 3M Guide discloses a prior art system for heating and cooling blood during open heart surgery. Ex. 1026 at 2 ("3M Health Care's Sarns and CDI cardiovascular products … [are] used in most of the 400,000 heart surgeries

performed each year … Heating and cooling devices provide water for heat exchangers used to regulate the patient's temperature"). Fallen Dec. ¶ 39. The 3M Guide is prior art under at least 35 U.S.C. § 102(b) because it was publicly available more than one year prior to the filing of the '268 Patent. *See* Ex. 1025 (Brigham Dec.). The 3M Guide is an education and sales brochure distributed by 3M in the mid to late-1990s to advertise its perfusion products and to educate consumers about its product offerings. *Id*. A perfusionist, interested in 3M's heater coolers, could have received a copy of the 3M Guide upon request. *Id*. The Federal Circuit has repeatedly found such manuals and sales brochures to be "printed publications" under 35 U.S.C. § 102. *See, e.g., Orion IP, LLC v. Hyundai Motor Am.*, 605 F.3d 967, 974-75 (Fed. Cir. 2010) (finding a "promotional publication" that was both direct mailed and used "as a part of [a] sales and demonstrative pitch" to be a printed publication).

The 3M Guide includes a diagrammatic illustration of an open heart surgery and the equipment (including the heating and cooling devices) used during a procedure. *Id.* at 3; Fallen Dec. ¶ 45. The '268 patent, filed five years after the 3M Guide was published, also includes a diagrammatic illustration "of the present invention as used in open heart surgery." Ex. 1001 at 3:60-62. ***The '268 patent essentially copies the illustration from the 3M Guide***. The extent of the copying is apparent from a side-by-side comparison of the illustrations:

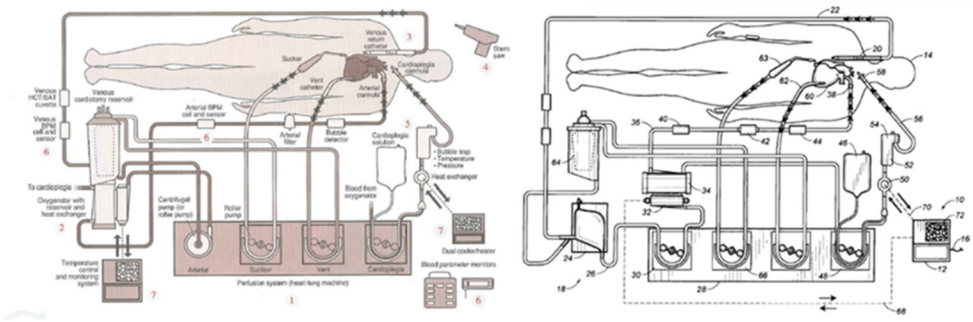

3M Guide 268 Patent Fig. 1

3M Guide (Ex. 1026) at 3 (left); Ex. 1001 at Fig. 1 (right, with no attribution for copied aspects of copyrighted 3M Guide material.)

The 3M Guide discloses a first fluid circuit and a second fluid circuit. Specifically, the 3M Guide describes a first water circuit (provided by a "Temperature Control and Monitoring System") for providing temperature controlled water to a heat exchanger used to heat the blood in the arterial/venous fluid circuit. Ex. 1026 at 11; Fallen Dec. ¶ 41. The annotated figure below shows the Temperature Control and Monitoring System ("TCM System") providing a first fluid circuit to heat exchangers.

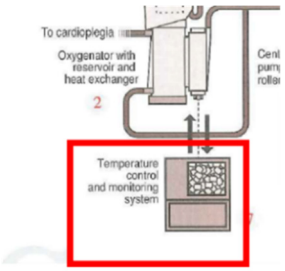

Arterial/Venous Heater Cooler

Ex. 1026 at 3 (annotations added); Fallen Dec. ¶ 45.

The 3M Guide describes the heater in a heat exchange relationship with the first fluid circuit. Ex. 1026 at 11 (the "3M Sarns Temperature Control Module II" includes "powerful heaters" for providing "water for heat exchangers to maintain precise patient temperature regulation…"); Fallen Dec. ¶ 42.

The 3M Guide also discloses a second heated fluid circuit that provides temperature controlled water to a cardioplegia heat exchanger independent from the first (TCM System) circuit. *See* Ex. 1026 at 11 (the "3M Sarns Dual Cooler Heater" ("DCH") is a "cooling and heating device that provides hot, warm or cold water used by the oxygenator and cardioplegia heat exchangers."); Fallen Dec. ¶¶ 41-42. The annotated figure below shows the second heated fluid circuit of the 3M Guide.

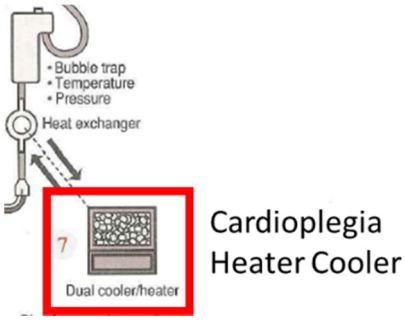

Ex. 1026 at 3 (annotations added); Fallen Dec. ¶ 45.

Although not explicitly disclosed, it is certainly inherent in the disclosures of the 3M Guide that power is supplied to each of the first and second heaters through a 110 volt source of electrical energy. Kelley Dec. ¶¶ 160-61. "Under the principles of inherency, if the prior art necessarily functions in accordance with, or

includes, the claims limitations, it anticipates." *Leggett & Platt, Inc. v. VUTEk, Inc*., 537 F.3d 1349, 1354 (Fed. Cir. 2008). The 3M Guide explicitly discloses the TCM System. The TCM System is the system described in the TCM II Manual and the TCM II Manual, which is Exhibit 1005, is a prior art publication used in Ground 2 of this Petition. The TCM II Manual discloses that the TCM System uses a 110 volt source of electrical energy. Ex. 1005 at 5. Even without the teaching of the TCM II Manual, a person of skill would readily understand that the heaters could use a 110 volt source of electrical energy given that it is the most common type of electrical service found in the United States. Kelley Dec. ¶ 161.

2. Forman

U.S. Patent No. 4,010,412 to Forman ("Forman") (Ex. 1008) discloses an apparatus for distributing power from a single alternating current supply to a plurality of loads. Ex. 1008 at Abstract; *Id*. at 2:29-42; 3:35-38; Kelley Dec. ¶ 176. Foreman discloses "a domestic electrical installation [which] includes, for example, four electric storage heaters 1-4, which, again, by way of example only, will be regarded as having a rating of 3kw each." Ex. 1008 at 3:35-38; Kelley Dec. ¶ 178. Thus, Forman discloses a "first heater" and a "second heater."

i. Forman Discloses a Power Supply Connected to the First and Second Heaters

Foreman discloses a single power supply (which is simply "a source of power") connected to the first and second heaters for supplying electrical energy to

the heaters. *See, e.g.*, Ex. 1008 at 2:28-32 ("According to the invention, apparatus for distributing power from ***a single alternating current source*** to a plurality of consuming units each having individual control means associated therewith …."); *see also id*. at 5:3-6; Kelley Dec. ¶¶ 179-80.

ii. Forman Discloses the Claimed Control Circuitry and Relay Means Recited in Independent Claims 1 and 12 and Dependent Claims 7 and 13.

Independent claim 1 recites a "controller" electrically interconnected to the power supply and the first and second heaters, such that the two heaters cannot be activated simultaneously and a similarly connected "relay means" for deactivating one of the heaters when the other is active. Ex. 1001 at 9:15-23. Independent claim 12 lacks the "controller" or "relay means" of claim 1; it simply recites a method of deactivating one heater when the other is active, such that both heaters cannot be activated simultaneously. *Id.* at 10:21-24. Dependent claim 7 focuses on the relay means energizing one heater when the other is de-energized. *Id.* at 9:40-42. Dependent claim 13 focuses on switching one heater to an activated state when the other is deactivated. *Id.* at 10:25-29. Each of these limitations are taught by Forman.

As noted by Forman, in "many types of electrical equipment, in particular much equipment incorporating electrical heating elements, … the maximum power demand is much greater than the normal average power demand … [n]evertheless,

the wiring of an installation containing several units of such equipment must provide for the possibility of all the thermostats being on simultaneously. Similar considerations apply to an appliance containing several independently controlled heating elements, such as an electric cooker." Ex. 1008 at 1:31-44. To address this problem, Forman discloses a plurality of "control means," "programming means," and "sequencing means" which serve to control power to the heaters in "immediately successive non-overlapping bursts of integral numbers of half cycles of the [AC power supply]." *Id*. at 2:29-47; Kelley Dec. ¶¶ 181-83. Thus, Forman discloses a controller (which is simply "a device, mechanism, or software that controls another component or system") electrically interconnected to a power supply and to a first and second heaters such that the first and second heaters cannot be activated simultaneously. Kelley Dec. ¶¶ 181-83.

Additionally, Forman teaches a plurality of solid state relays for deactivating one of the first and second heaters when the other is activated. The solid state relays described by Forman comprise a "triac," a "gate," and a "pulse processing circuit" associated with each load. Ex. 1008 at 5:27-35; Kelley Dec. ¶¶ 185-86. Forman discloses that the solid state relays deactivate one of the first and second heaters when the other is activated. Ex. 1008 at 6:51-60; Kelley Dec. ¶¶ 185-86. Forman thus discloses a relay means (which is simply "one or more signal actuated

switching devices") for deactivating one of a first and second heaters when the other of the first and second heaters is activated.

Forman further discloses that a relay means energizes one of the heaters as the other is de-energized, and that one heater may be switched to an activated state as another is deactivated. Specifically, Forman discloses a relay means comprising a plurality of triacs, wherein the triacs switches (or energizes) one of a first [L1] and second [L2] heaters to an activated state as the other of the heaters is de-activated (or de-energized). Kelley Dec. ¶ 188. A triac is one type of solid-state relay. Kelley Dec. ¶¶ 57-63. As described by Forman, "inputs from the lines t1 and t2 are applied to the associated two of the gates M1-M4 so that the gates are strobed alternately, each for half the time." *Id*. at 6:51-60. In this manner, L1 or L2 is switched to an activated state (energized) as the other of L1 or L2 is de-activated (de-energized). Thus, Forman discloses the claimed "relay means." Kelley Dec. ¶¶ 187-88.

3. One of Skill would have Combined the 3M Guide with Forman

A goal of the '268 patent was to "provide a fluid heating system which avoids unnecessary power surges, spikes, and current draw" that "can be operated from a single power outlet." Ex. 1001 at 2:26-28; 34-36. Forman explicitly discloses an "apparatus for distributing power from a single alternating current source to a plurality of consuming units each having individual control means

associated therewith." Ex. 1008 at 2:28-32. In addition to Forman, a large number of other ELM systems and techniques existed, some of which are listed in Table 1 of the Kelley Declaration. Kelley Dec. ¶ 22. The ubiquitous nature of such systems would have been well known to the person of ordinary skill (who is a person with at least two years of experience working with and/or designing such systems) and would have caused the person of ordinary skill to combine the system of Forman (or one of the many other prior art references) with the 3M Guide. Kelley Dec. ¶¶ 236-240. There is simply no question that a person of ordinary skill in the art at the time of the alleged invention would have been aware of the need for allocating power to the first and second heaters of the 3M Guide such that the first and second heaters could not be activated simultaneously. *See* Kelley Dec. ¶¶ 236-41. As the Supreme Court stated in *KSR*, "if a technique has been used to improve one device, and a person of ordinary skill would recognize that it would improve similar devices in the same way, using the technique is obvious unless its actual application is beyond his or her skill." *KSR Int'l Co. v. Teleflex Inc.*, 550 U.S. 398, 401 (2007).

It would have been obvious to one of skill in the art to combine the "controller" and "relay means" of Forman with the 3M Guide. Kelley Dec. ¶¶ 236-40. The Forman controller was already adapted for connection to a plurality of heaters. Ex. 1008 at 2:29-47. One of skill in the art would have been motivated

to combine such a controller with the 3M Guide so as to achieve the benefits of the Forman system. Kelley Dec. ¶¶ 236-40. Such modifications would have been considered routine and ordinary by a person of skill in the art at the time of the alleged invention. Kelley Dec. ¶ 241. Indeed, "when a patent [such as the '286 patent] 'simply arranges old elements with each performing the same function it had been known to perform' and yields no more than one would expect from such an arrangement, the combination is obvious." *KSR Int'l Co.*, 550 U.S. at 417.

It would also have been obvious to one of skill in the art at the time of the alleged invention to combine the "relay means" of Forman with the 3M Guide system for deactivating one of the first and second heaters when the other of the first and second heaters is activated. Kelley Dec. ¶¶ 236-40. The relay means described by Forman is already adapted for connection to a plurality of heaters. Ex. 1008 at 2:29-47; Kelley Dec. ¶¶ 236-40. Relay means which comprise "one or more signal actuated switching devices" were well known in the art at the time of the invention and would be considered a basic electrical design element by a person of ordinary skill. Kelley Dec. ¶¶ 239, 241. A person of ordinary skill in the art, especially by the late 1990s, would have understood that implementing such relay means in the 3M Guide system was a routine and ordinary engineering task, not an inventive innovation. Kelley Dec. ¶ 241.

Additionally, it would have been obvious to one of skill in the art to combine the power supply of Forman with the 3M Guide to supply a desired electrical energy to both heaters. Kelley Dec. ¶ 236.

4. The 3M Guide and/or Forman Disclose the Limitations of the Unasserted Dependent Claims

The accompanying claim chart specifically sets forth where the limitations of the unasserted dependent claims are disclosed in the 3M Guide and/or Forman. For reference, the 3M Guide and/or Forman disclose the limitations of the "amount/type" claims (2,6, 8, 11, 14-17). Forman discloses the limitations of the "timer" claims (claims 3-5). Both the admitted prior art and the 3M Guide disclose the limitations of the "sensor" claims (claims 9-10, 18).

The claim chart below sets forth in detail how the combination of the 3M Guide and Forman discloses each element of the claimed invention:

U.S. Patent 6,423,268	**3M Guide in view of Forman**
[1 Pre] A blood heating system for use in open heart surgery comprising:	The preamble is not limiting (in the litigation PO did not contend the preamble was limiting). Even if the preamble is limiting, the '268 patent admits that blood heating systems for use in open heart surgery were known in the prior art. Ex. 1001 at 1:60-2:14. Additionally, the 3M Guide discloses a blood heating system for use in open heart surgery. Ex. 1026 at 2.
[1a] a first fluid circuit;	See Ex. 1001 at 1:60-2:14. The 3M Guide discloses a system that provides water in a first fluid circuit. Ex. 1026 at 11 ("The 3M Sarns Temperature Control Module (TCM) II provides water for heat exchangers to maintain precise patient temperature regulation during bypass."); *see also id.* at 3.

[1b] a second fluid circuit defining a fluid flow pathway independent of said first fluid circuit;	*See* Ex. 1001 at 1:60-2:14. The 3M Guide discloses a system that provides water in a second fluid circuit defining a fluid flow pathway independent of the first fluid circuit. Ex. 1026 at 11 ("The 3M Sarns Dual Cooler/Heater is a cooling and heating device that provides hot, warm or cold water used by the oxygenator and cardioplegia heat exchangers."); *see also id*. at 3, 10, 14.
[1c] a first heater in heat exchange relationship with said first fluid circuit;	*See* Ex. 1001 at 2:8-14. The 3M Guide discloses that the water in the first fluid circuit is cooled by an ice tank or heated by a heater in a heat exchange relationship with the first fluid circuit. Ex. 1026 at 11.
[1d] a second heater in heat exchange relationship with said second fluid circuit;	*See* Ex. 1001 at 2:8-14. The 3M Guide discloses using a second heater in a heat exchange relationship with a second fluid circuit to heat the water in the second fluid circuit. Ex. 1026 at 10, 11, 14.
[1e] a power supply connected to said first and second heaters so as to supply a desired electrical power to said first and second heaters;	*See* Ex. 1001 at 1:60-2:14. Forman discloses a system including a power supply connected to heaters L1-L4 so as to supply a desired electrical power to the first heater and second heater. Ex. 1008 at 2:28-32 ("According to the invention, apparatus for distributing power from a single alternating current source to a plurality of consuming units each having individual control means associated therewith …."); *See also* 5:3-6.
[1f] a controller electrically interconnected to said power supply and to said first and second heaters such that said first and second heaters cannot be activated simultaneously; and	Figures 4A and 4B of Forman disclose a control system electrically interconnected to said power supply [ACL] and [ACN] and to a first [L1] and second [L2] heaters such that said first and second heaters cannot be activated simultaneously. *See, e.g.*, *id*. at 2:29-47 ("According to the invention, apparatus for distributing power from a single alternating current source to a plurality of consuming units each having individual control means associated therewith, comprises gat triggered current maintained devices adapted to be placed in series with each of the consuming units, means repeatedly to trigger on said devices substantially at the zero crossing points of the

	alternating current supply, sequencing means operative to control said trigger means so as to trigger on different, or different combinations, of the devices for immediately successive non-overlapping bursts of integral numbers of half cycles of the supply….”).
[1g] a relay means electrically interconnected between said first and second heaters and said power supply, said relay means for deactivating one of said first and second heaters when the other of said first and second heaters is activated.	As shown in Figures 4A and 4B, Forman disclose that the solid state relays deactivate one of the first and second heaters when the other is activated. *Id*. at 6:51-60 (“The connections of lines t1-t9 to the data inputs of the selectors H1-H4 are so arranged in relation to the programming of the selectors in response to the condition of the switches S1-S4 that when only one switch is closed, the associated one of the gates M1-M4 is strobed continuously; when two switches are closed, the inputs from the lines t1 and t2 are applied to the associated two of the gates M1-M4 so that the gates are strobed alternately, each for half the time ….”).
[7] The system of claim 1, wherein said relay means energizes one of said first and second heaters as the other of said first and second heaters is de-energized.	Forman discloses a relay means, wherein the relay means energizes one of a first [L1] and second [L2] heaters as the other of the heaters is de-energized. More specifically, as described by Forman, “inputs from the lines t1 and t2 are applied to the associated two of the gates M1-M4 so that the gates are strobed alternately, each for half the time.” *Id*. at 6:51-60. In this manner, L1 or L2 is energized as the other of L1 or L2 is de-energized.
[12 Pre] A method of heating a first fluid circuit and a second fluid circuit in open heart surgery comprising;	The preamble is not limiting (in the litigation PO did not contend the preamble was limiting). Even if the preamble is limiting, the ’268 patent admits that methods of heating a first and second fluid circuit in open heart surgery were known in the art. *See* Ex. 1001 at 1:60-2:14. Additionally, the 3M Guide discloses a blood heating system for use in open heart surgery. Ex. 1026 at 2.
[12a] connecting a first heater in heat exchange relationship with the first fluid circuit;	*See* Ex. 1001 at 1:60-2:14. The 3M Guide discloses a system that provides temperature controlled water (heated or cooled) to a first fluid circuit. The water is

	heated by a heater in a heat exchange relationship with the first fluid circuit. Ex. 1026 at 2 and 11.
[12b] connecting a second heater in heat exchange relationship with the second fluid circuit;	*See* Ex. 1001 at 1:60-2:14. The 3M Guide discloses a system that provides water in a second fluid circuit defining a fluid flow pathway independent of the first fluid circuit. Ex. 1026 at 2, 10-11, and 14.
[12c] supplying electrical energy to the first and second heaters from a single power supply; and	*See* Ex. 1001 at 1:60-2:14. Forman discloses a system including a power supply connected to heaters L1-L4 so as to supply a desired electrical power to the water heater and space heater. Ex. 1008 at 2:28-32 ("According to the invention, apparatus for distributing power from a single alternating current source to a plurality of consuming units each having individual control means associated therewith …."); *See also* 5:3-6.
[12d] deactivating one of said first and second heaters when the other of the first and second heaters is activated such that the first and second heaters cannot be activated simultaneously.	As shown in Figures 4A and 4B, Forman disclose a control system and a relay means for deactivating one of a first [L1] and second [L2] heaters when the other is activated such that the two heaters [L1, L2] cannot be activated simultaneously. *See, e.g.*, *id.* at 2:29-47 ("According to the invention, apparatus for distributing power from a single alternating current source to a plurality of consuming units each having individual control means associated therewith, comprises gat triggered current maintained devices adapted to be placed in series with each of the consuming units, means repeatedly to trigger on said devices substantially at the zero crossing points of the alternating current supply, sequencing means operative to control said trigger means so as to trigger on different, or different combinations, of the devices for immediately successive non-overlapping bursts of integral numbers of half cycles of the supply…."); 6:51-60 ("The connections of lines t1-t9 to the data inputs of the selectors H1-H4 are so arranged in relation to the programming of the selectors in response to the condition of the switches S1-S4 that

	when only one switch is closed, the associated one of the gates M1-M4 is strobed continuously; when two switches are closed, the inputs from the lines t1 and t2 are applied to the associated two of the gates M1-M4 so that the gates are strobed alternately, each for half the time ….”).
[13] The method of claim 12, said step of deactivating comprising: switching one of said first and second heaters to an activated state as the other of the first and second heaters is deactivated.	Forman disclose a relay means, wherein the relay means switches one of a first [L1] and second [L2] heaters to an activated state as the other of the heaters is de-activated. More specifically, as described by Forman, “inputs from the lines t1 and t2 are applied to the associated two of the gates M1-M4 so that the gates are strobed alternately, each for half the time.” *Id*. at 6:51-60. In this manner, L1 or L2 is switched to an activated state as the other of L1 or L2 is de-activated.
AMOUNT/TYPE CLAIMS (2, 6, 8, 11, 14-17)	
Claim 2 (heater draws between 15-20 amps)	Forman discloses that heaters L1-L4 may be “hotplates 21, 22, 23, and 24, two of these (for example) having a 2kw rating and the other two a 1.5 [kw] rating.” *Id*. at 4:18-21. Such heaters would draw between 15 and 20 amps from the power supply. Kelley Dec. ¶¶ 192-93.
Claim 6 (power supply is 110 volts)	A POSITA would understand that 3M Guide inherently teaches the use of a 110 volt power supply Kelley Dec. ¶¶ 160-61. The 3M Guide discloses the TCM II System which discloses a 110 volt power supply. Ex. 1005 at 5.
Claim 8 (solid state relays)	Forman discloses a relay means comprising a first solid state relay and a second solid state relay. Ex. 1008 at 5:27-35; 6:51-60.
Claim 11 (each heater is a 1500 watt heater)	Forman discloses a first and second heater that are 1500 watt electrical heaters. *Id*. at 4:20-21.
Claim 14 (switching heaters active/deactive after desired time period)	Forman teaches switching a first and second heaters alternatively between an activated and deactivated state after a desired period of time. *Id*. at 6:39-43.
Claim 15 (switching time = 4 seconds)	Forman discloses a step of switching wherein the cycle length may be varied depending on the requirements of the particular load. *Id*. at 6:39-43. It

	would have been obvious to modify the switching cycle of Forman to any one of a number of appropriate periods, including four seconds. Kelley Dec. ¶¶ 195-96.
Claim 16 (heaters never draw more than 20 amps)	Forman teaches supplying electrical energy to the heaters from a power supply in non-overlapping intervals such that the heaters never draw more than 20 amps from the single power supply. *Id*. at 2:37-43. *See also* Kelley Dec. ¶¶ 192-93.
Claim 17 (activating/deactivating heaters)	Forman discloses connecting a first relay to a first heater and a second relay to a second heater, said first relay activating the first heater when the second relay deactivates the second heater. *Id*. at 5:3-6; 6:51-60.
TIMER CLAIMS (3-5)	
Claim 3 (timer activates/deactivates second heater after desired time period)	Forman teaches a timer means for activating and deactivating the second heater after a desired period of time. At the direction of the timer, "when two switches are closed, the inputs from the lines t1 and t2 are applied to the associated two of the gates M1-M4 so that the gates are strobed alternately, each for half the time…" *Id*. at 6:56-60.
Claim 4 (timer = 4 seconds)	Forman discloses a timer wherein the cycle length may be varied depending on the requirements of the particular load. *Id*. at 6:39-43. It would have been obvious to modify the timing cycle of Forman to any one of a number of appropriate periods, including four seconds. Kelley Dec. ¶¶ 195-96.
Claim 5 (timer activates/deactivates first heater after a desired period of time)	Forman discloses that the timer means is connected to the solid state relays for activating and deactivating the first heater after a desired period of time has passed. *Id*. at 6:19-41. At the direction of the timer, "when two switches are closed, the inputs from the lines t1 and t2 are applied to the associated two of the gates M1-M4 so that the gates are strobed alternately, each for half the time…" *Id*. at 6:56-60.
SENSOR CLAIMS (9-10, 18)	
Claims 9 and 10 (sensors connected to relays for activating (claim 9) and	During prosecution Applicants admitted the entirety of Fig. 1 of the '268 patent (except element 12) was prior art. *See* Ex, 1009 at 01/16/2001 Amendment at

deactivating (claim 10) heater based on fluid circuit temperature)	10; Ex. 1001 at 4:10-19. The portion of Fig. 1 admitted to be prior art includes a "temperature monitor 54 that monitors and displays the temperature of the cardioplegia solution." Ex. 1001 at 4:44-46. Additionally, the 3M Guide discloses the TCM II Manual which explicitly discloses temperature sensors. Ex. 1005 at 27.
Claim 18 (sensing a temperature and transmitting a signal to relays connected to heaters)	*See* claim 9 *supra*. Forman also teaches transmitting a signal from a controller to first solid state relay connected to a first heater and transmitting a signal to a second solid state relay connected to a second heater to control the operation of the heaters. Ex. 1008 at 5:27-35; 6:51-60.

B. Ground 2 – TCM II Manual in view of Berger and further in view of Seitz

Claims 1-2, 6-7, 11-13, and 16 of the '268 patent are rendered obvious by the combination of TCM II Manual and Berger. Claims 3, 5, 8-10, 14, and 17-18 of the '268 patent are rendered obvious by the combination of TCM II Manual and Berger and Seitz. Similar to Ground 1, while the admitted prior art alone in combination with Berger renders many (if not all) of those same claims obvious, Petitioner uses the TCM II Manual publication as explicitly disclosing the admitted prior art. *See PharmaStem Therapeutics, Inc. v. ViaCell, Inc.*, 491 F.3d 1342, 1362 (Fed. Cir. 2007). The only claims Petitioner does not assert are rendered obvious by Ground 2 are the "4-second timer" claims (claims 4, 15).

1. TCM II Manual

The TCM II Manual discloses a prior art system for heating and cooling blood during open heart surgery. Ex. 1005 at 5 ("The Sarns™ TCM II (system) is

a source of temperature-controlled water for blood heat exchangers used in an extracorporeal circuit …")[5]; Fallen Dec. ¶ 46.

The TCM II Manual is prior art under at least 35 U.S.C. § 102(b) because it was publicly available more than one year prior to the filing of the '268 Patent. *See* Ex. 1004 (Wells Dec.). The TCM II Manual is an operator's manual that was distributed with TCM II systems sold in the mid-1990s. *Id*. at ¶ 4. An individual interested in the TCM II system could have obtained a copy of the TCM II Manual upon request. *Id*. at ¶ 7. 3M Healthcare (the author) did not place any restrictions on the use of the TCM II Manual. *Id*. The Federal Circuit has repeatedly found such user manuals to be "printed publications" under 35 U.S.C. § 102. *See, e.g., In re Enhanced Sec. Research, LLC,* 739 F.3d 1347, 1354 (Fed. Cir. 2014) (finding a user manual to be a printed publication and noting "[m]embers of the public showing an interest in buying or licensing the NetStalker product could have obtained a copy of the manual by contacting Haystack or Network Systems Corporation and requesting one" even though only about 12 NetStalker products were actually sold or installed)**.**

[5] The TCM II Manual is the manual for the 3M™ Sarns™ TCM II System – the system explicitly disclosed in the 3M Guide. *See* Ex. 1026 at 11.

The TCM II Manual discloses a first fluid circuit and a second fluid circuit. Specifically, the TCM II Manual describes a first water circuit (or "Main Water") for providing temperature controlled water to a heat exchanger used to heat the blood in the arterial fluid circuit. *Id*. at 5 ("The Sarns™ TCM II (system) is a source of temperature-controlled water for blood heat exchangers used in an extracorporeal circuit …"); Fallen Dec. ¶ 47.

The TCM II Manual discloses a heater in a heat exchange relationship with the first fluid circuit (called the "Main Water" circuit in the Manual). Ex. 1005 at 27 (the Main Water fluid circuit is "in a closed path past electric heaters for maximum warming."); *see also id.* at 25; Fallen Dec. ¶ 48.

The TCM II Manual discloses a second fluid circuit independent from the first (Main Water) circuit. Specifically, the TCM II Manual describes a second water circuit for providing temperature controlled water to a cardioplegia heat exchanger and the associated cardioplegia fluid circuit. *See* Ex. 1005 at 5 ("The Sarns™ TCM II also features a Cardioplegia System which will supply cooling water for cardioplegia."); Fallen Dec. ¶ 49. As will be explained below, for several reasons, it would have been obvious at the time to alternatively heat the second (cardioplegia) circuit.

The TCM II Manual discloses a single power supply connected to the system so as to supply a desired electrical energy to the various electrical loads,

including the heater. Ex. 1005 at 5 ("The Sarns TCM II requires a dedicated 20 Amp power source for the 115 volt model and a dedicated 15 Amp power source for the 220-240 volt model."); *see also id*. at 11; Kelley Dec. ¶ 165.

2. Berger

Berger discloses a "Combination Electric Water Heater and Electric Space Heater." Ex 1006. The system described by Berger comprises an "electric water heater and an electric heater [] combined with a control system for supplying a combined demand-limited electric current." *Id*. at Abstract. Thus, Berger discloses a "first heater" and a "second heater." Kelley Dec. ¶ 202. More specifically, as shown in the annotated version of Figure 4 of Berger below, Berger discloses space heater elements [403] and [404] and water heater elements [405] and [406]. Ex. 1006 at 4:67-5:9; Kelley Dec. ¶ 202.

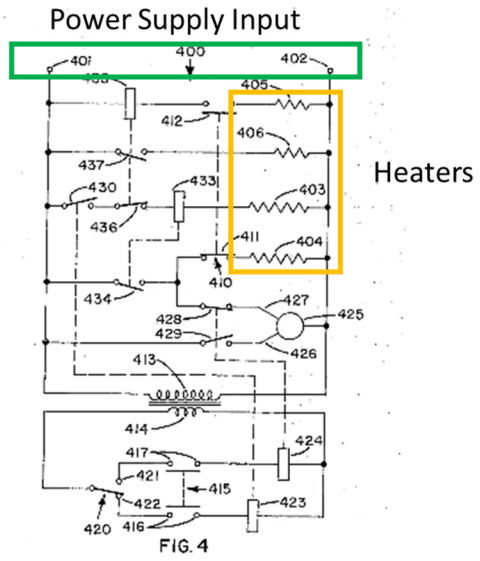

Ex. 1006 at FIG. 4 (annotations added); Kelley Dec. ¶ 202.

i. Berger Discloses a Power Supply Connected to the First and Second Heaters

Berger discloses a power supply connected to the water heater and space heater so as to supply a desired electrical power to the water heater and space heater. *Id*. at 2:45-52 ("Electric service is provided by connecting an electric power line 34 to a control compartment 32. In accordance with this invention, it is contemplated that ***a single electrical service line*** will be provided to the unit, even though the total demand of all of the individual electric heater elements in the unit exceeds the total current capacity permitted for a single electric power circuit."). *See also id*. at 2:58-60 (describing FIG. 2); *Id*. at 4:5-8; Kelley Dec. ¶¶ 203-04.

ii. Berger Discloses the Claimed Control Circuitry and Relay Means Recited in Independent Claims 1 and 12 and Dependent Claims 7 and 13

Berger discloses a control system electrically interconnected to the power supply, water heater, and space heater for managing the load of the heating elements contained in the electric water heater and space heaters such that all elements of the space heater and water heater cannot be activated simultaneously. *See, e.g.,* Ex. 1006 at Abstract ("***The control system*** is arranged to provide a predetermined desired ***priority to the various resistance heating elements*** in the combined system …"); *id*. at 1:5-7 ("This invention relates to a combined electric water heater and electric space heater ***having a control system*** which provides …"). S*ee also*, *id.* at FIGs. 2, 4, and 5; Kelley Dec. ¶ 207.

Additionally, Berger discloses relay means electrically interconnected between heaters and the use of relay means to deactivate certain heaters upon the activation of other heaters as shown in the preferred embodiments. *See, e.g., id*. at 4:62-66 ("In this circuit, the components are similar to those already described except that the water heater ***time delay relay 435 has an additional set of normally open contacts 437*** which are in series with second water heater element 406."). Such time delay relays deactivate one of the first and second heaters when the other is activated. *See, e.g., id*. at 4:66-5:5 ("When water heater thermostat 410 senses a demand for water heating, switch 412 closes and energizes first water heater element 405 and time delay relay 435. A few seconds later, normally closed time delay relay contacts 436 open [de-energizing space heater element 403] and ***normally open contacts 437 close, thereby energizing second water heater element 406***."); *see also* Kelley Dec. ¶¶ 209-10.

3. Seitz

U.S. Patent No. 6,246,831 to Seitz et al. ("Seitz") (Ex. 1027) discloses an apparatus for distributing power from a single alternating current supply to fluid heating elements. Ex. 1027 at Abstract. Seitz discloses "a system, method, and apparatus for heating a flowing fluid. The fluid may be heated to a desired temperature as the fluid flows through a plurality of heating chambers containing electric heating elements." *Id*. at 6:26-30; Kelley Dec. ¶ 215. Specifically, in "two

preferred embodiments … either two or four heating elements are used, one in each of two or four heating chambers, respectively." Ex. 1027 at 10:18-20. Additionally, Seitz discloses a system comprising a plurality of electromechanical and solid state relays for deactivating one of the first and second heaters when the other is activated. *Id*. at 17:58-61; 18:5-9; 18:20-29; 27:67-28:10; 38:3-13; Fig 12; Kelley Dec. ¶ 223.

4. One of Skill Would Have Combined the TCM II Manual With Berger and/or Seitz

It would have been obvious to combine the TCM II Manual with Berger such that the TCM II Manual comprised a second heater in a heat exchange relationship with its second fluid circuit (this second fluid circuit could then be used to heat the cardioplegia supply line). The admitted prior art from the '268 patent discloses that it was well known to use "systems . . . for the heating and cooling of the arterial supply line ***and the heating and cooling of the cardioplegia supply line***." Ex. 1001 at 1:60-62. Thus, the '268 patent discloses heating both a first and a second fluid circuit. In other words, it was known at the time to have alternatively heated the cardioplegia line that is disclosed as being cooled in the TCM II Manual.

It was known to heat the cardioplegia line is because the medical community had realized that for some patient's undergoing bypass, it was beneficial to provide a dose of "warm" cardioplegia to the heart (because the application of cold

cardioplegia could cause vasoconstriction of the vessels in the heart, making it more difficult for the cardioplegia solution to penetrate fully). Fallen Dec. ¶¶ 21-22. The warm cardioplegia would flow more easily through the coronary arteries due to the maintenance of normal blood temperatures and more adequately provide myocardial protection. Fallen Dec. ¶ 22. Additionally, at the end of surgery, it was desirable to control the rewarming of the patient's heart by controlling the temperature of the cardioplegia solution. Fallen Dec. ¶ 22. The disclosure of the '268 patent as to what was known in the art is consistent with and confirms what was known in the medical community about the clinical benefits of heating cardioplegia in certain applications. Collectively, this evidence makes clear it would have been obvious to combine one of the heaters of Berger with the TCM II Manual.

Furthermore, having made such a combination, one of ordinary skill in the art at the time of the alleged invention would have been aware of the need for controlling power to the first and second heaters of the TCM II Manual/Berger device such that the first and second heaters could not be activated simultaneously. Kelley Dec. ¶¶ 252-53.

To begin, the TCM II Manual teaches a system designed to account for multiple electrical loads. Specifically, the TCM II Manual teaches a compressor that creates ice for cooling the second fluid circuit. Ex. 1005 at 16; Kelley Dec. ¶¶

166-67. From an electrical design standpoint, a compressor is similar to a heater in that both create electrical loads and may draw similar amounts of current from the power supply. Kelly Dec. ¶ 167. The TCM II Manual teaches deactivating the compressor when the electric heaters are activated, so as not to draw excessive current and trip the circuit breaker. Ex. 1005 at 15; Kelley Dec. ¶ 168. Given the design of the TCM II Manual, controlling the electrical load of an additional heater (or replacing the compressor of the TCM II Manual with a second heater) would be an obvious design choice. Kelly Dec. ¶ 256.

Berger (like Forman) is a prior art system with two heaters in which control circuitry that includes relays was used to manage the electrical current load. Ex. 1006 at 4:65-5:5; Kelley Dec. ¶¶206-209. The controller described by Berger is already adapted for connection to a plurality of heaters. One of skill in the art would have been motivated to combine such a controller with the TCM II Manual so as to achieve the benefits of the Berger system. Kelley Dec. ¶¶ 252-56. Such modifications would have been considered routine and ordinary by a person of skill in the art at the time of the alleged invention. *Id*. Such a combination would result in the TCM II Manual/Berger system comprising a controller electrically interconnected to a power supply and to said first and second heaters such that said first and second heaters cannot be activated simultaneously.

It would have further been obvious to one of skill in the art at the time of the alleged invention to combine the "relay means" of Berger with the TCM II Manual for deactivating one of the first and second heaters when the other of the first and second heaters is activated. *Id*. The relay means described by Berger is already adapted for connection to a plurality of heaters. Ex. 1006 at 4:65-5:5; Kelley Dec. ¶¶ 206-209. One of skill in the art would have known to combine the relay means of Berger with the TCM II Manual so as to deactivate one of the first or second heaters when the other of the first or second heaters was activated. Kelley Dec. ¶¶ 252-56. A person of ordinary skill in the art would have understood that implementing such relay means in the TCM II Manual system was a routine and ordinary engineering task, not an inventive innovation. *Id*.

Furthermore, it would have been obvious to combine the relay means, timer, and sensor circuitry of Seitz with the TCM II/Berger System such that the relay means comprised the solid state relays, timer, and sensor circuitry of Seitz in addition to the electromechanical relays taught by Berger. Kelley Dec. ¶¶ 262-66. Seitz teaches a system comprising both electromechanical and solid state relays for activating a heater when another is activated (Ex. 1027 at 18:5-9; 18:20-29; 17:58-61; 27:67-28:10), and as such, it would have been a simple modification to include the solid state relays of Seitz with the electromechanical relays taught by Berger. Kelley Dec. ¶¶ 262-66.

Additionally, it would have been obvious to one of skill in the art to modify the power supply of the TCM II Manual so as to supply a desired electrical energy to both heaters of the combined system. Kelley Dec. ¶ 251.

5. The TCM Manual/Berger/Seitz Disclose the Limitations of the Unasserted Dependent Claims

The accompanying claim chart specifically sets forth where the limitations of the unasserted dependent claims are disclosed in the TCM II Manual/Berger/Seitz. For reference, both Seitz and the TCM II Manual disclose the limitations of the "amount/type" claims (2, 6, 8, 11, 14-17). Seitz discloses the limitations of the "timer" claims (claims 3-5). Both the admitted prior art and the TCM II Manual disclose the limitations of the "sensor" claims (claims 9-10, 18).

The claim chart below sets forth in detail how the combination of the TCM II Manual in view of Berger and Seitz teaches each element of the claimed invention:

U.S. Patent 6,423,268	**TCM II Manual in view of Berger and Seitz**
[1 Pre] A blood heating system for use in open heart surgery comprising:	The preamble is not limiting (in the litigation PO did not contend the preamble was limiting). Even if the preamble is limiting, the '268 patent admits that blood heating systems for use in open heart surgery were known in the prior art. Ex. 1001 at 1:60-2:14. Additionally, the TCM II Manual describes a prior art system for heating and cooling blood during open heart surgery. Ex. 1005 at 5 ("The Sarns™ TCM II (system) is a source of temperature-controlled water for blood heat exchangers used in an extracorporeal circuit …").

[1a] a first fluid circuit;	*See* Ex. 1001 at 1:60-2:14. The TCM II Manual discloses a system that provides water in a first (Main Water) fluid circuit. Ex. 1005 at 5 ("a source of temperature-controlled water for blood heat exchangers used in an extracorporeal circuit ….").
[1b] a second fluid circuit defining a fluid flow pathway independent of said first fluid circuit;	*See* Ex. 1001 at 1:60-2:14. The TCM II Manual discloses a system that provides water in a second fluid circuit defining a fluid flow pathway independent of the first (Main Water) fluid circuit. Ex. 1005 at 5 ("The Sarns TCM II also features a Cardioplegia System which will supply cooling water for cardioplegia.").
[1c] a first heater in heat exchange relationship with said first fluid circuit;	*See* Ex. 1001 at 1:60-2:14. The TCM II Manual discloses that the water in the first (Main Water) fluid circuit is cooled by an ice tank or heated by a heater in a heat exchange relationship with the first fluid circuit. Ex. 1005 at 25 ("The main unit, which supplies water for both blood heat exchangers and blankets has five modes of operation. … In Rewarm mode . . . the pump draws water past the heaters for maximum warming to 42° C. In Maintain mode … the operator selects a water temperature; water is drawn either past the heaters or from the ice water tank to attain and maintain the selected temperature.").
[1d] a second heater in heat exchange relationship with said second fluid circuit;	*See* Ex. 1001 at 1:60-2:14 (teaching a heater in a heat exchange relationship with the second fluid circuit). The TCM II Manual discloses a system that provides water (albeit cooled) in a second fluid circuit defining a fluid flow pathway independent of the first (Main Water) fluid circuit. Ex 1005 at 5 ("The Sarns TCM II also features a Cardioplegia System which will supply cooling water for cardioplegia."). Berger discloses a system including a first "electric heater" and a second "electric water heater." Ex. 1006 at Abstract. More specifically, Berger discloses space heater elements 403 and 404 and water heater elements 405 and 406.

[1e] a power supply connected to said first and second heaters so as to supply a desired electrical power to said first and second heaters;	*See* Ex. 1001 at 1:60-2:14. TCM II Manual discloses a power supply connected to the heater so as to supply a desired electrical energy to the heating elements. Ex. 1005 at 5 ("The Sarns TCM II requires a dedicated 20 Amp power source for the 115 volt model and a dedicated 15 Amp power source for the 220-240 volt model."). *See also id*. at 11.
[1f] a controller electrically interconnected to said power supply and to said first and second heaters such that said first and second heaters cannot be activated simultaneously; and	Berger discloses a control system electrically interconnected to said power supply [401, 402] and to a first [406] and second [403] heaters such that said first and second heaters cannot be activated simultaneously. *See, e.g.*, Ex. 1006 at 1:5-9 ("This invention relates to a combined electric water heater and electric space heater ***having a control system which provides a limited total current demand*** which is less than the total demand of all the electric heater elements in the system."); *See also* 4:66-5:5. Alternatively, Berger discloses yet another control system for a system having four electrical heater elements. *Id*. at 4:45-52.
[1g] a relay means electrically interconnected between said first and second heaters and said power supply, said relay means for deactivating one of said first and second heaters when the other of said first and second heaters is activated.	Berger discloses a relay means [435, 436, 437] electrically interconnected between said first [406] and second [403] heaters and said power supply [401, 402], said relay means for deactivating one of said first and second heaters when the other of said first and second heaters is activated. *Id*. at 4:66-5:5 ("When water heater thermostat 410 senses a demand for water heating, switch 412 closes and energizes first water heater element 405 and time delay relay 435. A few seconds later, normally closed time delay relay contacts 436 open [de-energizing space heater element 403] and normally open contacts 437 close, thereby energizing second water heater element 406.").
[7] The system of claim 1, wherein said relay means energizes one of said first and second heaters as the other of	Berger discloses a relay means [435, 436, 437], wherein the relay means energizes one of a first [403] and second [406] heaters as the other of the heaters is de-energized. More specifically, as indicated by the dashed line between 437 and 436 in Figure 4 of Berger, normally open contacts 437 close (energize)

said first and second heaters is de-energized.	heater 406 as contacts 436 open (de-energize) heater 403 based on the state of coil 435.
[12 Pre] A method of heating a first fluid circuit and a second fluid circuit in open heart surgery comprising;	The preamble is not limiting (in the litigation PO did not contend the preamble was limiting). Even if the preamble is limiting, the '268 patent admits that blood heating systems for use in open heart surgery were known in the prior art. Ex. 1001 at 1:60-2:14. Additionally, the TCM II Manual describes a prior art system for heating and cooling blood during open heart surgery. Ex. 1005 at 5 ("The Sarns™ TCM II (system) is a source of temperature-controlled water for blood heat exchangers used in an extracorporeal circuit …").
[12a] connecting a first heater in heat exchange relationship with the first fluid circuit;	*See* Ex. 1001 at 1:60-2:14. The TCM II Manual discloses a system that provides temperature controlled water (heated or cooled) to a first fluid circuit. The water is heated by a heater in a heat exchange relationship with the first fluid circuit. Specifically, the TCM II Manual discloses a system that provides water in a first (Main Water) fluid circuit. Ex. 1005 at 5 ("a source of temperature-controlled water for blood heat exchangers used in an extracorporeal circuit …."). The TCM II Manual discloses that the water in the first (Main Water) fluid circuit is cooled by an ice tank or heated by a heater in a heat exchange relationship with the first fluid circuit. *Id*. at 25 ("The main unit, which supplies water for both blood heat exchangers and blankets has five modes of operation. … In Rewarm mode . . . the pump draws water past the heaters for maximum to 42° C … In Maintain mode … the operator selects a water temperature; water is drawn either past the heaters or from the ice water tank to attain and maintain the selected temperature.").
[12b] connecting a second heater in heat exchange relationship with the second fluid circuit;	*See* Ex. 1001 at 1:60-2:14. (teaching a heater in a heat exchange relationship with the second fluid circuit). The TCM II Manual discloses a system that provides water (albeit cooled) in a second fluid circuit defining a fluid flow pathway independent of the first (Main

	Water) fluid circuit. Ex 1005 at 5 ("The Sarns TCM II also features a Cardioplegia System which will supply cooling water for cardioplegia."). Berger discloses a system including a first "electric heater" and a second "electric water heater." Ex. 1006 at Abstract. More specifically, Berger discloses space heater elements 403 and 404 and water heater elements 405 and 406.
[12c] supplying electrical energy to the first and second heaters from a single power supply; and	*See* Ex. 1001 at 1:60-2:14. The TCM II Manual discloses supplying electrical energy to a heater from a single power supply. Ex. 1005 at 5 ("The Sarns TCM II requires a dedicated 20 Amp power source for the 115 volt model and a dedicated 15 Amp power source for the 220-240 volt model."). *See also id*. at 11.
[12d] deactivating one of said first and second heaters when the other of the first and second heaters is activated such that the first and second heaters cannot be activated simultaneously.	Berger discloses a control system [400] and a relay means [435, 436, 437] for deactivating one of a first [403] and second [406] heaters when the other is activated such that the two heaters [403, 406] cannot be activated simultaneously. Ex. 1006 at 1:5-9 ("This invention relates to a combined electric water heater and electric space heater having a control system which provides ***a limited total current demand*** which is less than the total demand of all the electric heater elements in the system."); *See also* 4:66-5:5.
[13] The method of claim 12, said step of deactivating comprising: switching one of said first and second heaters to an activated state as the other of the first and second heaters is deactivated.	Berger discloses a relay means [435, 436, 437], wherein the relay means switches one of a first [403] and second [406] heaters to an activated state as the other of the heaters is de-activated. More specifically, as indicated by the dashed line between 437 and 436 in Figure 4 above, normally open contacts 437 close (activate) heater 406 as contacts 436 open (de-activate) heater 403 based on the state of coil 435.
AMOUNT/TYPE CLAIMS (2, 6, 8, 11, 14, 16-17)	
Claim 2 (heaters draw 15-20 amps)	The '268 patent admits that it was common in prior art systems to use 1500 watt heaters, and states that such

	heaters would draw approximately 15 amps. Ex. 1001 at 2:8-11.
Claim 6 (power supply is 110 volts)	The TCM II Manual discloses a power supply that is a single 115 volt source of electrical energy. Ex. 1005 at 5 ("The Sarns TCM II requires a dedicated 20 Amp power source for the 115 volt model and a dedicated 15 Amp power source for the 220-240 volt model."); *see also id*. at 23 ("Power Supply … Voltage … 108-122 V~").
Claim 8 (solid state relays)	Seitz discloses a relay means comprising a first solid state relay and a second solid state relay interposed between a power supply, a first heater, and a second heater, said solid state relays being switched by a controller so as to pass alternating current from the power supply to the first or the second heater. Ex. 1027 at 18:5-9; 18:20-35; Fig. 12; 27:67-28:10; 32:45-62; 38:3-13. The TCM II Manual discloses a single power supply being from a single electrical outlet. Ex. 1005 at 11 ("Plug the power cord into a wall outlet of proper voltage, frequency, and capacity as indicated on the nameplate label.").
Claim 11 (each heater is a 1500 watt heater)	The '268 patent admits that it was common in prior art systems to use 1500 watt heaters, and states that such heaters would draw approximately 15 amps. Ex. 1001 at 2:8-11.
Claim 14 (switching heaters active/deactive after desired period of time)	Seitz discloses switching a first and second heaters alternatively between an activated and deactivated state after a desired period of time. Ex. 1027 at 9:2-6; *Id*. at 10:20-44; Fig 12; 38:3-13; claim 1.
Claim 16 (heaters never draw more than 20 amps)	The TCM II Manual discloses a power supply that is limited to 20 amps. Ex. 1005 at 5 ("The Sarns TCM II requires a dedicated 20 Amp power source for the 115 volt model").
Claim 17 (activating/deactivating heaters)	Seitz discloses connecting a first relay to a first heater and a second relay to a second heater, said first relay activating the first heater when the second relay deactivates the second heater. Ex. 1027 at 10:20-44; 17:58-61; 18:5-9; 18:20-35; 27:67-28:10; 38:3-13.
TIMER CLAIMS (3, 5)	

Claim 3 (timer activates/deactivates second heater after a desires time period)	Seitz teaches a timer means for activating and deactivating the second heater after a desired period of time. At the direction of the timer, the activation and deactivation of a "plurality of heating elements is sequentially timed…" Ex. 1027 at claim 1; 9:2-6; 10:20-44; Fig 12; 38:3-13.
Claim 5 (timer activates/deactivates first heater after a desired period of time)	Seitz teaches that the timer means is connected to the solid state relays for activating and deactivating the first heater after a desired period of time has passed. Ex. 1027 at 10:20-44; 18:5-9; 18:20-35; 27:67-28:10; 32:45-62; 38:3-13; Fig. 12.
SENSOR CLAIMS (9-10, 18)	
Claims 9 and 10 (sensors connected to relays for activating (claim 9) and deactivating (claim 10) heater based on fluid circuit temperature)	The TCM II Manual discloses a "thermistor probe" that provides measurements to a microprocessor for adjusting temperature. Ex. 1005 at 27. It would have been obvious to replicate the first sensor of the TCM II Manual so as to include a second sensor interactive with the second fluid circuit in a similar manner. The portion of Fig. 1 admitted to be prior art (*see* claims 9 and 10 chart for Ground 1 *supra*) includes a "temperature monitor 54 that monitors and displays the temperature of the cardioplegia solution." Ex. 1001 at 4:44-46.
Claim 18 (sensing a temperature and transmitting a signal to relays connected to heaters)	The TCM II Manual discloses sensing a temperature of a fluid in a first fluid circuit and activating a heater in response thereto. Ex. 1005 at 27. It would have been obvious to similarly sense the temperature of a fluid in the second fluid circuit and activate a heater in response thereto. Additionally, Seitz teaches transmitting a signal from a programming means to the first or second relay connected to the first or second heater when the temperature is below a desired level. Ex. 1027 at 7:52-66; 17:58-61; 18:5-9; 18:20-35; 23:60-24:22.

6. Ground 2 is not Redundant of Ground 1

Ground 2 is not redundant of Ground 1 for several reasons. First, the disclosures of the 3M Guide (used in Ground 1) and TCM II Manual (used in Ground 2) differ. The 3M Guide discloses heaters on both the first and second fluid loops. Ex. 1026 at 3. The TCM II Manual only discloses a heater on the first fluid loop. Ex. 1005 at 25. In other respects, the disclosure of the TCM II Manual is more detailed than that of the 3M Guide. For example, the TCM II Manual explicitly discloses the sensors of dependent claims 9, 10, and 18.

Second, because each ground relies upon a printed publication as a reference, those printed publication references rely, in part, on the testimony of a declarant to establish that the reference meets the legal requirements to qualify as a printed publication. However, both the declarant and the testimony itself differ for the two printed publications. The 3M Guide was an educational and sales brochure and relies upon the testimony of Michael Brigham. *See* Brigham Dec. (Ex. 1025). The TCM II Manual is the operator's manual for the TCM II heater/cooler and relies upon the testimony of Edward Wells. *See* Wells Dec. (Ex. 1004). While Petitioner strongly believes each reference readily meets the legal requirements to qualify as printed publication prior art, in the event the Board disagrees with respect to one of the two references, it would be highly prejudicial and

fundamentally unfair to Petitioner for the Board to exclude the other reference based on the doctrine of redundancy.

Third, Ground 1 relies upon the disclosure of the ELM system of Forman. Forman discloses solid state relays. Ground 2 relies upon the ELM system of Berger. Berger discloses electromechanical relays. While Petitioner strongly believes both references disclose the relevant claim limitations, to the extent PO argues to the contrary, it would be highly prejudicial and fundamentally unfair to exclude the other reference based on redundancy.

Fourth, Ground 1 is asserted against all claims, Ground 2 is asserted against less than all the claims. Ground 2 is not asserted against dependent claims 4 and 15. For all of the foregoing reasons, Ground 1 and Ground 2 are not redundant of each other and the Petition should be granted as to both Grounds.

C. Ground 3 – Witherspoon in view of Forman (All Claims)

All claims of the ’268 patent are rendered obvious by the combination of Witherspoon and Forman. As with Ground 1 and 2, the admitted prior art teaches many (if not all) of the limitations taught by Witherspoon.

1. Witherspoon

U.S. Patent No. 5,702,358 to Witherspoon (“Witherspoon”) discloses a cardioplegia delivery device which may be used to deliver heated (or cooled) cardioplegia solution at a controlled temperature.” Ex. 1007 at 1:5-10. *See also id*.

at Abstract ("A cardioplegia delivery device … [comprising a] heat exchanger control circuit … which includes a heater and an ice bath for warming or cooling the cardioplegia fluid delivered to the patient."); *id.* at 2:55-64 ("In another aspect the invention is a device for controlling the temperature of a heat exchange liquid such as water which is circulated through a heat exchange liquid flow path of the heat exchanger used for warming of cooling blood or cardioplegia fluid."); *Id*. at 7:65-8:1.

Figure 7 of Witherspoon depicts the fluid circuit, heater, and heat exchange relationship. Ex. 1007 at FIG. 7; *see also id*. at 8:18-22 ("As seen in FIG. 7 when the operator selects warm water, three-way valve 110 is selected to bypass cool water reservoir 88 so that the water in the circuit is recirculated around a loop which includes water pump 108, heater 114 and heat exchanger 28."); Fallen Dec. ¶ 53.

Witherspoon also teaches that in another embodiment the device may be used to provide heated water to a heat exchanger for heating blood in the arterial/venous circuit (instead of the cardioplegia circuit). Specifically, Witherspoon discloses that it may be used "for supplying heat exchange liquid to a heat exchanger used in an extracorporeal circuit for warming or cooling blood." Ex. 1007 at. 4:40-44; Fallen Dec. ¶ 55.

The claimed "power supply" is inherent in the disclosures of Witherspoon. Kelley Dec. ¶¶ 174-75. Witherspoon describes several electrical systems and subsystems which require a supply of electrical energy to operate. "Under the principles of inherency, if the prior art necessarily functions in accordance with, or includes, the claims limitations, it anticipates." *Leggett & Platt, Inc. v. VUTEk, Inc*., 537 F.3d 1349, 1354 (Fed. Cir. 2008). For example, Witherspoon describes a heater and other system components as electric or electrical. *See* Ex. 1007 at 7:18-20 ("The containment reservoir is isolated from the ***electronics*** so that no safety or performance problems are created."); Kelley Dec. ¶175. Witherspoon similarly describes an "electrical cable 37" (6:33) connected to a "display panel 34" (6:33) – both of which require a power supply for supplying a desired electrical energy to operate. Kelley Dec. ¶¶ 174-75. Most commonly, this power supply would be supplied by a power cord connected to a 110/115 volt supply of electrical energy, such as is provided by an everyday wall outlet. Kelley Dec. ¶ 175.

Witherspoon further teaches one or more sensors interactive with the first fluid circuit and heater. Specifically, Witherspoon teaches a sensor for sensing the temperature in the fluid circuit, and that the sensor is connected to a heat exchange controller, which activates and deactivates the heater depending on the temperature in the fluid circuit. *Id*. at 3:17-40 ("A temperature sensor may be provided to sense the temperature of water delivered to or from the heat exchanger … with the heater

controller being responsive to the sense temperature to adjust the temperature of the heater upward if the sensed temperature is less than a selected temperature and to adjust the temperature of the heater downward if the sensed temperature exceeds the selected temperature.”).

2. Forman

As described above with respect to Ground 1, Forman discloses a system for controlling the application of power to a plurality of heaters and includes the claimed “power supply,” “controller,” and “relay means.” Forman also discloses the limitations of many of the asserted dependent claims.

3. One of Skill Would have Combined Two of Witherspoon’s Systems With Forman

Given Witherspoon’s teachings that its heated fluid circuit can be used to heat either the cardioplegia heat exchanger or the arterial/venous heat exchanger, it would have been obvious to a person of ordinary skill in the art to use a second Witherspoon device to heat and cool a second fluid circuit. *See* Ex. 1007 at 1:5-10; 2:55-64; 4:40-44. The background of the ’268 patent confirms just such a use – admitting it was well known to use two devices, each with a fluid circuit and a heater in heat exchange relationship with the fluid circuit. Ex. 1001 at 1:60-66.

Further, it would have been obvious to combine the ELM system of Forman with two Witherspoon devices. Kelley Dec. ¶ 271. Such a combination would have provided benefits that would have been well known to the person of ordinary

skill in the art, such as avoiding an overload if both devices were operated simultaneously from the same power supply. Kelley Dec. ¶¶ 271-75.

For the same reasons as described with respect to the 3M Guide in Ground 1, it would have been obvious to combine the control circuitry and relay means of Forman with Witherspoon for activating and deactivating the heaters of the combined Witherspoon system such that the heaters cannot be activated simultaneously. Kelley Dec. ¶¶ 271-77. One of skill in the art would have been motivated to combine such a controller and relays with the Witherspoon system so as to achieve the benefits of the Forman system by avoiding simultaneous operation of the first and second heaters and the resulting overdraw of current. *Id*.

Additionally, for the same reasons as described in Ground 1 with respect to the 3M Guide (e.g., so as to supply power to the heaters), it would have been obvious to combine the single power supply of Forman with Witherspoon to supply power to both heaters. Kelley Dec. ¶ 271.

The claim chart below sets forth in detail how the combination of Witherspoon and Forman discloses each element of the claims:

U.S. Patent 6,423,268	**Witherspoon in view of Forman**
[1 Pre] A blood heating system for use in open heart surgery comprising:	The preamble is not limiting. Even if the preamble is limiting, the '268 patent admits this alleged limitation. *See* Ex. 1001 at 1:60-2:14. Further, Witherspoon describes a system for heating blood in open heart surgery. Ex. 1007 at 1:5-10; *see also id*. at 4:40-42.

[1a] a first fluid circuit;	*See* Ex. 1001 at 1:60-2:14. Witherspoon discloses a fluid circuit, as shown in Figure 7. *See also* Ex. 1007 at 8:18-22 ("As seen in FIG. 7 when the operator selects warm water, three-way valve 110 is selected … so that the water in the circuit is recirculated around a loop ….").
[1b] a second fluid circuit defining a fluid flow pathway independent of said first fluid circuit;	*See* Ex. 1001 at 1:60-2:14. Witherspoon discloses a fluid circuit, as shown in Figure 7 of Witherspoon. *See also* Ex. 1007 at 8:18-22 ("As seen in FIG. 7 when the operator selects warm water, three-way valve 110 is selected … so that the water in the circuit is recirculated around a loop ….").
[1c] a first heater in heat exchange relationship with said first fluid circuit;	*See* Ex. 1001 at 1:60-2:14. Witherspoon discloses a heater (114) in a heat exchange relationship with its fluid circuit. Ex. 1007 at 2:55-59 ("In another aspect the invention is a device for controlling the temperature of a heat exchange liquid such as water which is circulated through a heat exchange liquid flow path of the heat exchanger used for warming of cooling blood or cardioplegia fluid."); 7:65-8:1 ("The heat exchanger control circuit includes cool water reservoir 88, a water pump 108, a three-way valve 110, a two-way valve 112, and a heater 114.").
[1d] a second heater in heat exchange relationship with said second fluid circuit;	*See* Ex. 1001 at 1:60-2:14. Witherspoon discloses a heater (114) in a heat exchange relationship with its fluid circuit. Ex. 1007 at 2:55-59 ("In another aspect the invention is a device for controlling the temperature of a heat exchange liquid such as water which is circulated through a heat exchange liquid flow path of the heat exchanger used for warming of cooling blood or cardioplegia fluid."); 7:65-8:1 ("The heat exchanger control circuit includes cool water reservoir 88, a water pump 108, a three-way valve 110, a two-way valve 112, and a heater 114.").
[1e] a power supply connected to said first and second heaters so as to supply a desired	*See* Ex. 1001 at 1:60-2:14. Forman discloses a power supply connected to a first and second heaters so as to supply a desired electrical power to the first and second heaters. *See* full Forman citation *supra* Ground 1.

electrical power to said first and second heaters;	
[1f] a controller electrically interconnected . . . said first and second heaters cannot be activated simultaneously; and	Forman discloses a controller electrically interconnected to a power supply and to a first and second heaters such that the first and second heaters cannot be activated simultaneously. *See* full Forman citation *supra* Ground 1.
[1g] a relay means electrically interconnected . . . for deactivating one of said first and second heaters when the other of said first and second heaters is activated.	Forman discloses a relay means electrically interconnected between a first and second heaters and a power supply, said relay means for deactivating one of the first and second heaters when the other of the first and second heaters is activated. *See* full Forman citation *supra* Ground 1.
[7] The system of claim 1, wherein said relay means energizes one of said first and second heaters as the other of said first and second heaters is de-energized.	Forman discloses a relay means wherein the relay means energizes one of a first and second heaters as the other is de-energized. *See* full Forman citation *supra* Ground 1.
[12 Pre] A method of heating a first fluid circuit and a second fluid circuit in open heart surgery comprising;	The preamble is not limiting. Even if the preamble is limiting, the ’268 patent admits this alleged limitation. *See* Ex. 1001 at 1:60-2:14. Further, Witherspoon describes a system for heating blood in open heart surgery. Ex. 1007 at 1:5-10; *see also id*. at 4:40-42.
[12a] connecting a first heater in heat exchange relationship with the first fluid circuit;	*See* Ex. 1001 at 1:60-2:14. Witherspoon discloses a heater (114) in a heat exchange relationship with its fluid circuit. Ex. 1007 at 2:55-59 (“In another aspect the invention is a device for controlling the temperature of a heat exchange liquid such as water which is circulated through a heat exchange liquid flow path of the heat exchanger used for warming of cooling blood or cardioplegia fluid.”); 7:65-8:1 (“The heat exchanger control circuit includes cool water

	reservoir 88, a water pump 108, a three-way valve 110, a two-way valve 112, and a heater 114.”).
[12b] connecting a second heater in heat exchange relationship with the second fluid circuit;	*See* Ex. 1001 at 1:60-2:14. Witherspoon discloses a heater (114) in a heat exchange relationship with its fluid circuit. Ex. 1007 at 2:55-59 (“In another aspect the invention is a device for controlling the temperature of a heat exchange liquid such as water which is circulated through a heat exchange liquid flow path of the heat exchanger used for warming of cooling blood or cardioplegia fluid.”); 7:65-8:1 (“The heat exchanger control circuit includes cool water reservoir 88, a water pump 108, a three-way valve 110, a two-way valve 112, and a heater 114.”).
[12c] supplying electrical energy to the first and second heaters from a single power supply; and	*See* Ex. 1001 at 1:60-2:14. Forman discloses supplying electrical energy to a first and second heaters from a single power supply. *See* full Forman citation *supra* Ground 1.
[12d] deactivating one of said first and second heaters . . . such that the first and second heaters cannot be activated simultaneously.	Forman discloses deactivating one of a first and second heaters when the other is activated such that the first and second heaters cannot be activated simultaneously. *See* full Forman citation *supra* Ground 1.
[13] The method of claim 12, . . . first and second heaters is deactivated.	Forman discloses switching one of a first and second heaters to an activated state as the other of the first and second heaters is deactivated. *See* full Forman citation *supra* Ground 1.
AMOUNT/TYPE CLAIMS (2, 6, 8, 11, 14-17)	
Claims 2, 11, 14-17	*See* full Forman citations *supra* Ground 1.
Claim 6 (Power supply is 110 volts)	Witherspoon inherently teaches the use of a 110 volt source of electrical energy. Kelley Dec. ¶ 175.
Claim 8 (solid state relays)	*See* full Forman citations *supra* Ground 1. Witherspoon inherently teaches a single power supply being from a single electrical outlet. Kelley Dec. ¶ 175.
TIMER CLAIMS (3-5)	

See full Forman citations *supra* Ground 1.	
SENSOR CLAIMS (9-10, 18)	
Claims 9 and 10 (sensors connected to relays for activating (claim 9) and deactivating (claim 10) heater based on fluid circuit temperature)	Witherspoon explicitly discloses a temperature sensor. Ex. 1007 at 3:17-40. The portion of Fig. 1 admitted to be prior art (*see* claims 9 and 10 chart for Ground 1 *supra*) includes a "temperature monitor 54 that monitors and displays the temperature of the cardioplegia solution." Ex. 1001 at 4:44-46.
Claim 18 (sensing a temperature and transmitting a signal to relays connected to heaters)	Witherspoon explicitly discloses a temperature sensor. Ex. 1007 at 3:17-40. Forman teaches transmitting a signal from a controller to first solid state relay connected to a first heater and transmitting a signal to a second solid state relay connected to a second heater to control the operation of the heaters. Ex. 1008 at 5:27-35; 6:51-60.

4. Ground 3 is not Redundant of Grounds 1 and 2

Ground 3 is not redundant of Grounds 1 or 2. In the event that the Board determines that one or both of the 3M Guide or the TCM II Manual printed publications are not prior art, such a determination may impact Ground 1 (3M Guide) or Ground 2 (TCM II Manual). Ground 3 relies solely on U.S. patents as prior art under 35 U.S.C. § 102(b) and admitted prior art.

VIII. CONCLUSION

All claims of the '268 patent are invalid pursuant to Grounds 1-3 set forth above. Accordingly, Petitioner requests *inter partes* review of all claims.

Respectfully submitted,

Dated: November 13, 2014 *<u>/s/ Mathias W. Samuel</u>*
Mathias W. Samuel, Reg. No. 39,823

Dated: November 13, 2014 *<u>/s/ Stephen R. Schaefer</u>*
Stephen R. Schaefer, Reg. No. 37,927

Both above signers of:
Fish & Richardson P.C.
3200 RBC Plaza
60 South Sixth Street
Minneapolis, MN 55402
Attorneys for Petitioner

(Trial No. _____)

CERTIFICATE OF SERVICE

Pursuant to 37 CFR §§ 42.6(e)(4) and 42.6(e)(4)(iii), the undersigned certifies that on November 13, 2014, a complete and entire copy of this Petition for *Inter Partes* Review and all supporting exhibits were provided via FedEx to the Patent Owner by serving the correspondence address of record as follows:

Egbert Law Offices
1314 Texas Avenue
21st Floor
Houston, TX 77002

We are also serving on November 13, 2014, a complete and entire copy of this Petition for *Inter Partes* Review and all supporting exhibits via FedEx to the counsel in the underlying district court litigation as follows:

McGinnis, Lochridge & Kilgore, L.L.P.
600 Congress Avenue
Suite 2100
Austin, TX 78701

Hamilton PC
1600 Barton Springs Rd.
Suite 6601
Austin, TX 78704

/Christine Rogers/

Christine Rogers
Fish & Richardson P.C.
3200 RBC Plaza
60 South Sixth Street
Minneapolis, MN 55402
(650) 839-5092